TOLL ROAD MAINTENANCE M-2, M-4, & M-5 BUILDINGS

M-2: 4504 N. FAIL RD. — LA PORTE, IN 46350
M-4: 7200 N. 600 W. — SHIPSHEWANA, IN 46565
M-5: 7565 N. 650 W. — ORLAND, IN 46776

TERMS AND ABBREVIATIONS

A

ABV	ABOVE
AFF	ABOVE FINISH FLOOR
ACC	ACCESS
ACFL	ACCESS FLOOR
AP	ACCESS PANEL
AC	ACOUSTICAL
ACPL	ACOUSTICAL PLASTER
ACT	ACOUSTICAL TILE
ACR	ACRYLIC PLASTIC
ADH	ADHESIVE
ADJ	ADJACENT
ADJT	ADJUSTABLE
AGG	AGGREGATE
A/C	AIR CONDITIONING
ALT	ALTERNATE
AL	ALUMINUM
ANC	ANCHOR, ANCHORAGE
AB	ANCHORBOLT
ANOD	ANODIZED
ARCH	ARCHITECT, ARCHITECTURAL
AD	AREA DRAIN
ASPH	ASPHALT
AT	ASPHALT TILE
AUTO	AUTOMATIC
AWN	AWNING

B

BKR	BACKER
BSMT	BASEMENT
BL	BASE LINE
BM	BEAM
BRG	BEARING
BPL	BEARING PLATE
BEL	BELOW
BM	BENCH MARK
BET	BETWEEN
BVL	BEVELED
BEY	BEYOND
BLK	BLOCK
BLKG	BLOCKING
BD	BOARD
BS	BOTH SIDES
BOT	BOTTOM
BRKT	BRACKET
BRS	BRASS
BRK	BRICK
BRZ	BRONZE
BLDG	BUILDING
BUR	BUILT UP ROOFING
BRGL	BULLET RESISTANT GLASS
BO	BY OWNER

C

CAB	CABINET
CAN	CANVAS
CPT	CARPET
CSMT	CASEMENT
CI	CAST IRON
CST	CAST STONE
CB	CATCH BASIN
CLG	CEILING
CHT	CEILING HEIGHT
CEM	CEMENT
CM	CENTIMETER (S)
CER	CERAMIC
CT	CERAMIC TILE
CHBD	CHALKBOARD
CHAM	CHAMFER
CHIM	CHIMNEY
CR	CHROMIUM
CIR	CIRCLE
CIRC	CIRCUMFERENCE
CLR	CLEAR, CLEARANCE
CLS	CLOSURE

C (CONT.)

CGL	COATED GLASS
COL	COLUMN
COMB	COMBINATION
COM	COMMON
COMPT	COMPARTMENT
COMPO	COMPOSITION, COMPOSITE
COMP	COMPRESS,(ED), (ION), (IBLE)
CONC	CONCRETE
CMU	CONCRETE MASONRY UNIT
CONN	CONNECTION
CONST	CONSTRUCTION
CONT	CONTINUE, CONTINUOUS
CONTR	CONTRACT, CONTRACTOR
CJT	CONTROL JOINT
CPR	COPPER
CG	CORNER GUARD
CORR	CORRUGATED
CTR	COUNTER
CS	COUNTERSINK
CRS	COURSE
CFT	CUBIC FOOT
CYD	CUBIC YARD

D

DPR	DAMPER
DP	DAMPROOFING
DL	DEADLOAD
DEM	DEMOLISH, DEMOLITION
DMT	DEMOUNTABLE
DTL	DETAIL
DIAG	DIAGONAL
DIA	DIAMETER
DIM	DIMENSION
DIR	DIRECTION
DISP	DISPENSER
DIV	DIVISION
DR	DOOR
DTA	DOVETAIL ANCHOR
DTS	DOVETAIL ANCHOR SLOT
DN	DOWN
DS	DOWNSPOUT
DT	DRAIN TILE
DWR	DRAWER
DWG	DRAWING
DF	DRINKING FOUNTAIN
DW	DUMBWAITER

E

EA	EACH
EF	EACH FACE
EW	EACH WAY
ESMNT	EASEMENT
E	EAST
ELAS	ELASTIC
ELEC	ELECTRIC, (AL)
EP	ELECTRICAL PANELBOARD
EWC	ELECTRIC WATER COOLER
EL	ELEVATION (VERTICAL HEIGHT)
ELE	ELEVATION VIEW
ELEV	ELEVATOR
EMER	EMERGENCY
ENC	ENCLOSE, (URE)
EPX	EPOXY
EQ	EQUAL
EQP	EQUIPMENT
ESC	ESCALATOR
EST	ESTIMATE
EXH	EXHAUST
EXG	EXISTING
EXMP	EXPANDED METAL PLATE
EB	EXPANSION BOLT
EJT	EXPANSION JOINT
EXP	EXPOSED
EXT	EXTERIOR

F

FOC	FACE OF CONCRETE
FOF	FACE OF FINISH
FOM	FACE OF MASONRY
FOS	FACE OF STUDS
FAS	FASTEN, FASTENER
FN	FENCE
FBD	FIBERBOARD
FGL	FIBERGLASS
FSP	FIBERGLASS SANDWICH PANEL
FIN	FINISH, (ED)
FFE	FINISHED FLOOR ELEVATION
FFL	FINISHED FLOOR LINE
FA	FIRE ALARM
FE	FIRE EXTINGUISHER
FEC	FIRE EXTINGUISHER CABINET
FHS	FIRE HOSE STATION
FPL	FIREPLACE
FP	FIREPROOF
FRT	FIRE-RETARDANT
FIXT	FIXTURE
FLG	FLASHING
FLX	FLEXIBLE
FG	FLOAT GLASS
FLR	FLOOR, (ING)
FD	FLOOR DRAIN
FL	FLOW LINE
FLUR	FLUORESCENT
FJT	FLUSH JOINT
FTG	FOOTING
FND	FOUNDATION
FR	FRAME, (D), (ING)
FS	FULL SIZE
FUR	FURRED, (ING)
FUT	FUTURE
FRP	FIBERGLASS REINFORCED PANEL

G

GA	GAGE, GAUGE
GV	GALVANIZED
GKT	GASKET, (ED)
GC	GENERAL CONTRACT, (OR)
GL	GLASS, GLAZING
GLB	GLASS BLOCK
GCMU	GLAZED CONCRETE MASONRY UNITS
GLAM	GLUED LAMINATE
GB	GRAB BAR
GD	GRADE, GRADING
GRN	GRANITE
GRT	GRATE, (ING)
GVL	GRAVEL
GRHS	GREENHOUSE
GT	GROUT
GRD	GUARD
GUT	GUTTER
GPDW	GYPSUM DRY WALL
GPL	GYPSUM LATH
GPPL	GYPSUM PLASTER
GPT	GYPSUM TILE
GPW	GYPSUM WALLBOARD

H

HC	HANDICAP
HRL	HANDRAIL
HBD	HARDBOARD
HDW	HARDWARE
HWD	HARDWOOD
HDR	HEADER
HTG	HEATING
HVAC	HEATING/VENT./AIR COND.
HD	HEAVY DUTY
HT	HEIGHT
HPT	HIGH POINT
HCR	HOLLOW CORE
HM	HOLLOW METAL
HOR	HORIZONTAL
HB	HOSE BIBB

I

INCAN	INCANDESCENT
INCIN	INCINERATOR
INCL	INCLUDE, (ED), (ING)
ID	INSIDE DIAMETER
INS	INSULATE, (ED), (ING)
INSC	INSULATING CONCRETE
IGL	INSULATING GLASS
INT	INTERIOR
INTM	INTERMEDIATE
INV	INVERT

J

JC	JANITOR'S CLOSET
JT	JOINT
JF	JOINT FILLER
J	JOIST

K

KPL	KICKPLATE
KIT	KITCHEN
KES	KITCHEN EQUIPMENT SUPPLIER
KO	KNOCKOUT

L

LBL	LABEL
LAB	LABORATORY
LAD	LADDER
LB	LAG BOLT
LAM	LAMINATE, (ED)
LGL	LAMINATED GLASS
LAV	LAVATORY
LO	LAYOUT
LH	LEFT HAND
L	LENGTH
LT	LIGHT
LW	LIGHTWEIGHT
LMS	LIMESTONE
LTL	LINTEL
LL	LIVE LOAD
LOC	LOCATE
LLD	LOOSE LAID
LVR	LOUVER
LVT	LUXURY VINYL TILE
LPT	LOW POINT

M

MB	MACHINE BOLT
MH	MANHOLE
MFR	MANUFACTURE, (ER) (ED)
MRB	MARBLE
MAS	MASONRY
MTL	MATERIAL
MAX	MAXIMUM
MECH	MECHANIC, (AL)
MC	MEDICINE CABINET
MED	MEDIUM
MDO	MEDIUM DENSITY OVERLAY
MBR	MEMBER
MMB	MEMBRANE
MET	METAL
M	METER, (S)
MW	MICROWAVE
MM	MILLIMETER, (S)
MIN	MINIMUM
MIR	MIRROR
MGL	MIRROR GLASS (FRAMED)
MISC	MISCELLANEOUS
MOD	MODULAR
MLD	MOLDING, MOULDING
MR	MOP RECEPTOR
MT	MOUNT, (ED), (ING)
MOV	MOVABLE
MULL	MULLION

N

NL	NAILABLE
NAT	NATURAL
NI	NICKEL
NR	NOISE REDUCTION
NOM	NOMINAL
N	NORTH
NIC	NOT IN CONTRACT
NTS	NOT TO SCALE
NO	NUMBER

O

OC	ON CENTER, (S)
OP	OPAQUE
OPG	OPENING
OPH	OPPOSITE HAND
ORN	ORNAMENTAL
OD	OUTSIDE DIAMETER
OA	OVERALL
OH	OVERHEAD

P

PNT	PAINT, (ED)
PNL	PANEL, (ING)
PB	PANIC BAR
PTD	PAPER TOWEL DISPENSER
PTR	PAPER TOWEL RECEPTOR
PAR	PARALLEL
PRPT	PARAPET
PK	PARKING
PBD	PARTICLE BOARD
PTN	PARTITION
PV	PAVE, (D), (ING)
PVMT	PAVEMENT
PERF	PERFORATE, (ED)
PER	PERIMETER
PLTR	PLANTER
PLTG	PLANTING
PLAS	PLASTER
PLA	PLASTIC
PLAM	PLASTIC LAMINATE
PL	PLATE
PG	PLATE GLASS
PWD	PLYWOOD
PT	POINT
PVC	POLYVINYL CHLORIDE
PE	PORCELAIN ENAMEL
PCPL	PORTLAND CEMENT PLASTER
PD	POUND,(S)
PCF	POUNDS PER CUBIC FOOT
PLF	POUNDS PER LINEAR FOOT
PSF	POUNDS PER SQUARE FOOT
PSI	POUNDS PER SQUARE INCH
PCC	PRECAST CONCRETE
PFB	PREFABRICATE, (ED)
PFN	PREFINISHED
PRF	PREFORMED
PREM	PREMOULDED
PRTD	PRESSURE TREATED
PROJ	PROJECT, (ED), (ING)
PL	PROPERTY LINE

Q

QT	QUARRY TILE

R

RBT	RABBET, REBATE
RAD	RADIUS
RFT	RAFTER
RL	RAIL, (ING)
REC	RECESS. (ED)
REF	REFER, (ENCE)
RFL	REFLECT, (ED), (IVE), (OR)

R (CONT.)

REFR	REFRIGERATOR
REG	REGISTER
REIN	REINFORCE, (ED), (ING), (MENT)
RECP	REINFORCED CONCRETE PIPE
REM	REMOVE, (ABLE)
REQ'D	REQUIRED
RES	RESILIENT
RET	RETURN
RA	RETURN AIR
RVS	REVERSE (SIDE)
REV	REVISE, (S), (ED)
RH	RIGHT HAND
ROW	RIGHT OF WAY
R	RISER
RVT	RIVET
R&S	ROD AND SHELF
RD	ROOF DRAIN
RFH	ROOF HATCH
RFG	ROOFING
RM	ROOM
RO	ROUGH OPENING
RCP	ROUND CONCRETE PIPE
ROK	ROWLOCK
RB	RUBBER BASE
RBT	RUBBER TILE
RBL	RUBBLE STONE

S

SFGL	SAFETY GLASS
SCH	SCHEDULE
SCN	SCREEN, (ED)
SCONC	SEALED CONCRETE
SCUP	SCUPPER
SNT	SEALANT
STG	SEATING
SECT	SECURITY
SEC	SECTION
SVYD	SERVICE YARD
SSK	SERVICE SINK
SHTH	SHEATH, (ING)
SHT	SHEET
SG	SHEET GLASS
SH	SHELF, SHELVING
SHNG	SHINGLE, (S)
SHU	SHUTTER, (S)
SIDG	SIDING
SIM	SIMILAR
SKL	SKYLIGHT
SL	SLEEVE
SLO	SLOPE
SOL	SOLDIER
SC	SOLID CORE
SP	SOUNDPROOF
S	SOUTH
SPC	SPACE, (R)
SGL	SPANDREL GLASS
SPK	SPEAKER
SPL	SPECIAL
SPEC	SPECIFICATION
SPH	SPLASH
SQ	SQUARE
SQ FT	SQUARE FOOT (FEET)
SSM	SOLID SURFACE MATERIAL
SST	STAINLESS STEEL
STGL	STAINED GLASS
STD	STANDARD
STA	STATION
ST	STEEL
STO	STORAGE
SF	STOREFRONT
SD	STORM DRAIN
STR	STRUCTURAL
STCO	STUCCO
SFLR	SUBFLOOR
SA	SUPPLY AIR
SUS	SUSPENDED
SYD	SIDE YARD
SYM	SYMMETRY, (ETRICAL)
SYN	SYNTHETIC
SYS	SYSTEM

T

TKBD	TACKBOARD
TEL	TELEPHONE
TV	TELEVISION
TG	TEMPERED GLASS
TIG	TEMPERED, INSULATED GLASS
TZ	TERRAZZO
THK	THICK, (NESS)
THR	THRESHOLD
TBRL	TO BE RELOCATED
TOBR	TO BE REMOVED
TPD	TOILET PAPER DISPENSER
TPTN	TOILET PARTITION
TOL	TOLERANCE
T&G	TONGUE AND GROOVE
TSL	TOP OF CONCRETE SLAB
TC	TOP OF CURB
TJ	TOP OF JOIST
TP	TOP OF PLATE
TST	TOP OF STEEL
TSF	TOP OF SUBFLOOR
TW	TOP OF WALL
TPG	TOPPING
TOR	TO REMAIN
TB	TOWEL BAR
TRC	TRAFFIC COATING
TR	TRANSOM
T	TREAD
TRNB	TURNBUCKLE
TYP	TYPICAL

U

UC	UNDERCUT
UNF	UNFINISHED
UNO	UNLESS NOTED OTHERWISE
UR	URINAL
UTL	UTILITY

V

VJ	V-JOINT
VB	VAPOR BARRIER
VAR	VARNISH
VNR	VENEER
VERT	VERTICAL
VG	VERTICAL GRAIN
VIN	VINYL
VB	VINYL BASE
VCT	VINYL COMPOSITION TILE
VF	VINYL FABRIC
VT	VINYL TILE
VWC	VINYL WALL COVERING
VICP	VITREOUS CLAY PIPE
VICT	VITREOUS CLAY TILE

W

WSCT	WAINSCOT
WH	WALL HUNG
WC	WATER CLOSET
WHTR	WATER HEATER
WP	WATERPROOFING
WR	WATER RESISTANT
WS	WATERSTOP
WST	WEATHERSTRIP, (ING)
WWF	WELDED WIRE FABRIC
W	WEST
WHS	WHEEL STOP
WID	WIDTH, WIDE
WIN	WINDOW
WG	WIRED GLASS
WM	WIRE MESH
WO	WITHOUT
WD	WOOD
WI	WROUGHT IRON

DRAWING SYMBOLS LEGEND

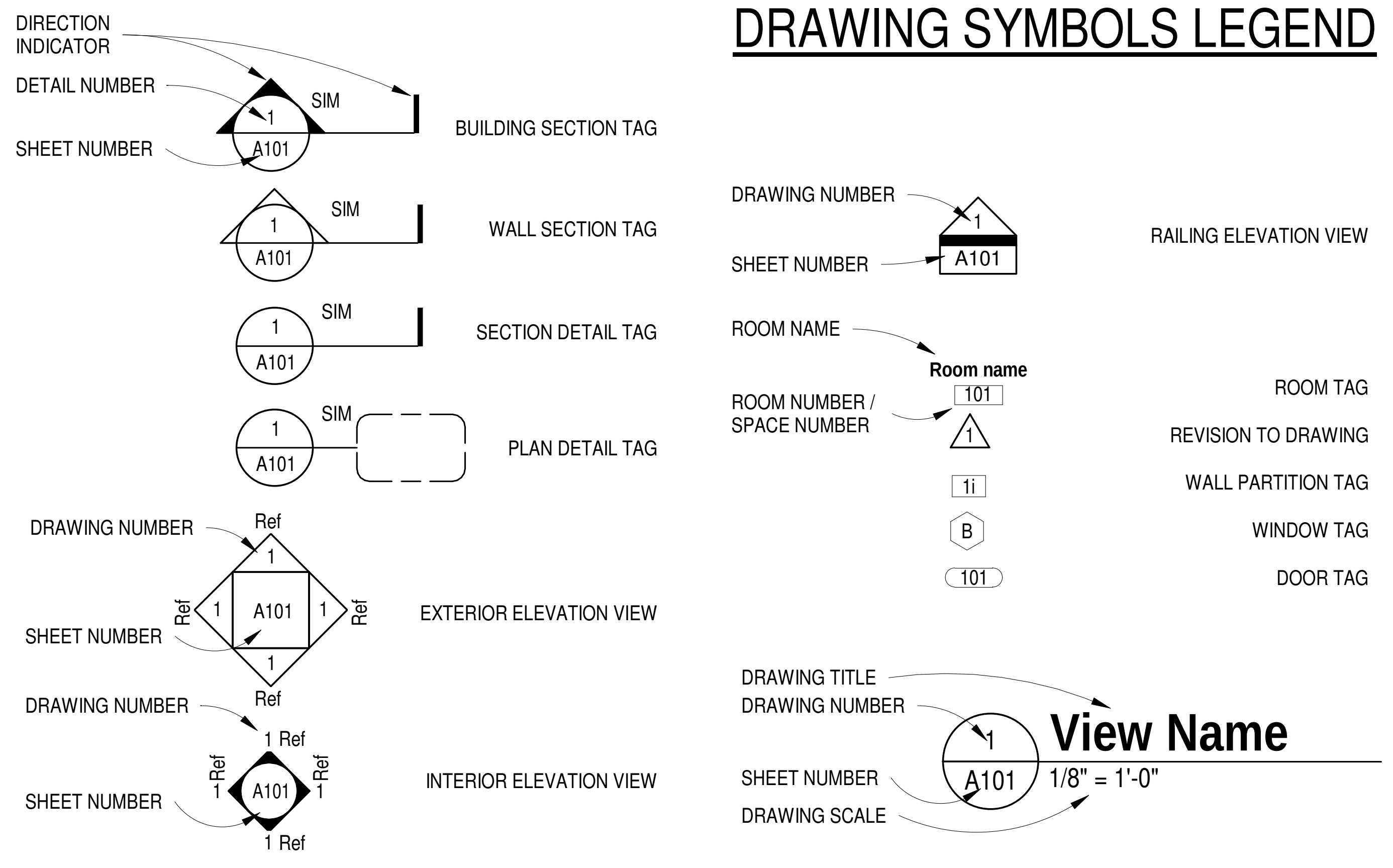

PROJECT LOCATION

SITE: 4504 N. FAIL RD.
LAPORTE, IN 46350
M-2
AREA MAP

SITE: 7200 N. 600 W.
SHIPSHEWANA, IN 46565
M-4
AREA MAP

SITE: 7565 N. 650. W.
ORLAND, IN 46776
M-5
AREA MAP

SITE: 4504 N. FAIL RD.
LAPORTE, IN 46350
M-2
SITE MAP

SITE: 7200 N. 600 W.
SHIPSHEWANA, IN 46565
M-4
SITE MAP

SITE: 7565 N. 650. W.
ORLAND, IN 46776
M-5
SITE MAP

1/23/2025 5:12:57 AM

OWNER

INDIANA TOLL ROAD
ITR Concession Company LLC
3200 Cassopolis Street
Elkhart, IN 46514
PH: (574) 304-5256
EMAIL: smcneish@indianatollroad.org

CONTACT:
Shannon McNeish

ARCHITECT

JONES PETRIE RAFINSKI
325 S. Lafayette Blvd.
South Bend, IN 46601
PH: (574) 232-4388
EMAIL: ekowalczyk@jpr1source.com

CONTACT:
Edward J. Kowalczyk, AIA

MECHANICAL, ELECTRICAL, PLUMBING

SCO ENGINEERING, LLC
6534 Constitution Drive
Fort Wayne, IN 46804
PH: (260) 436-9213
EMAIL: tofferle@sco-llc.com

CONTACT:
Thomas Offerle, PE

SHEET INDEX

ARCHITECTURAL

M2,4,5-0 TITLE SHEET/ DRAWING INDEX
M2-1 OVERALL FLOOR PLAN & DEMOLITION PLANS
M2-2 FLOOR PLAN, REFLECTED CEILING PLAN, ENLARGED PLANS, AND WALL SECTION
M2-3 ELEVATIONS
M4-1 OVERALL FLOOR PLAN & DEMOLITION PLANS
M4-2 FLOOR PLAN, REFLECTED CEILING PLAN, ENLARGED PLANS, AND WALL SECTION
M4-3 ELEVATIONS
M5-1 OVERALL FLOOR PLAN & DEMOLITION PLANS
M5-2 FLOOR PLAN, REFLECTED CEILING PLAN, ENLARGED PLANS, AND WALL SECTION
M5-3 ELEVATIONS

PLUMBING

M1-P0 M1 PLUMBING GENERAL INFORMATION
M1-P1 M1 PLUMBING DEMOLITION PLANS
M1-P2 M1 PLUMBING PLANS

MECHANICAL

M1-M0 M1 MECHANICAL GENERAL INFORMATION
M1-M1 M1 MECHANICAL PLANS
M1-M2 M1 ROOF MECHANICAL PLANS

ELECTRICAL

M1-E000 M1 ELECTRICAL GENERAL INFORMATION
M1-E101 M1 ELECTRICAL PLANS
M1-E501 M1 ELECTRICAL DETAILS
M1-E601 M1 ELECTRICAL SCHEDULES

BUILDING INFORMATION

CONSTRUCTION TYPE: II-B
OCCUPANCY CLASSIFICATION: STORAGE (S-1/B)

LOCAL CODE INFORMATION

BUILDING CODE: 2014 INDIANA BUILDING CODE (2012 IBC)
MECHANICAL CODE: 2014 INDIANA MECHANICAL CODE (2012 IBC)
PLUMBING CODE: 2012 INDIANA PLUMBING CODE (2012 IPC)
ELECTRICAL CODE: 2009 INDIANA ELECTRIC CODE (NFPA-70-2008)
FIRE CODE: 2014 INDIANA FIRE CODE (2012 IFC)
ENERGY CODE: 2010 IECC (ASHRAE 90.1-2007)
BARRIER FREE CODE: 2012 INDIANA BUILDING CODE (2009 ADAAG)
(ANSI-A117.1 2003)

GENERAL PROJECT NOTES

1. AIA DOCUMENT A201-2017 GENERAL CONDITIONS OF THE CONTRACT FOR CONSTRUCTION SHALL BE INCORPORATED INTO THESE DRAWINGS AND CONSIDERED PART OF THE REQUIREMENTS FOR COMPLETION OF WORK.
2. THE TERM WORK AS USED IN THESE DOCUMENTS SHALL INCLUDE ALL PROVISIONS DRAWN, SPECIFIED, AND WRITTEN IN THESE DOCUMENTS AND ISSUED BY THE ARCHITECT.
3. ALL ITEMS REPRESENTED IN THE DRAWINGS AND REFERRED TO IN THE SPECIFIATIONS ARE TO BE PROVIDED, COORDINATED, AND INSTALLED BY THE CONTRACTOR UNLESS SPECIFICALLY NOTED OTHERWISE. THE CONTRACTOR SHALL COORDIANTE WITH THE OWNER AND GOVERNING AUTHORITIES TO ESTABLISH CONSTRUCTION TRAFFIC ACCESS TO THE SITE AND DESIGNATED CONSTRUCTION ACCESS AND STAGING AREAS THROUGHOUT THE SITE.
4. CONTRACTOR SHALL PROTECT EXISTING MATERIALS, COMPONENTS, AND FEATURES THAT ARE NOT SUBJECT TO CONSTRUCTION ACTIVITIES RELATED TO THE WORK IN THESE DOCUMENTS. UPON CONTRACT COMPLETION, ALL PROJECT AREAS ACCESSED BY THE CONTRACT SHALL BE CLEAN OF DUST AND DEBRIS RELATED TO DEMOLATION AND CONSTRUCTION ACTIVITIES. EXISTING MATERIALS, COMPONENTS AND FEATURES THAT ARE DAMAGED OR DESTROYED DURING CONSTRUCTION ACTIVITIES ARE THE RESPONSIBILITY OF THE CONTRACTOR TO REPAIR AND RESTORE TO THEIR ORIGINAL CONDITION PRIOR TO CONSTRUCTION ACTIVITIES.
5. ALL CONTRACTORS SHALL BE LICENSED, BONDED, AND INSURED TO PERFORM THE SCOPE OF WORK FOR WHICH THEY ARE CONTRACTED AT THE PROJECT SITE AND SHALL BE REQUIRED TO FULLY COMPLY WITH APPLICABLE STATE AND LOCAL CODES AND REGULATIONS.
6. THESE DRAWINGS ARE GENERAL DESCRIPTIONS OF THE MATERIALS AND PRODUCTS TO BE USED TO COMPLETE THIS PROJECT. IT IS THE CONTRACTOR'S RESPONSIBILITY TO VISIT THE SITE, COMPARE EXISTING CONDITIONS WITH PROPOSED PLANS AND SPECIFICATIONS AND PROVIDE SITE PREPARATION AND ANY OTHER COMPONENT REQUIRED TO COMPLETE THE PROPOSED CONSTRUCTION. CONTACT ARCHITECT IMMEDIATELY WHERE INCONSISTENCIES ARE DISCOVERED.
7. EXISTING MATERIALS AND CONDITIONS INDICATED ON THESE DRAWINGS ARE BASED ON LIMITED FIELD OBSERVATIONS AND ARE NOT WARRANTED TO INDICATE ACTUAL MATERIALS AND CONDITIONS. CONTRACTOR SHALL BE RESPONSIBLE TO VERIFY ALL EXISTING MATERIALS AND CONDITIONS. CONTRACTOR SHALL NOTIFY ARCHITECT UPON DISCOVERY OF ANY MATERIALS AND CONDITIONS THAT HAVE A SIGNIFICANT VARIATION FROM THE DRAWINGS OR WHICH AFFECT THE DESIGN OF THE PROPOSED CONSTRUCTION.
8. CONTRACTOR TO PROVIDE PRODUCT SUBMITTALS OF ALL MATERIALS TO ARCHITECT FOR REVIEW WITH OWNER. ALL MATERIALS TO BE INSTALLED PER MANUFACTURERS SPECIFICATIONS. PRODUCT SAMPLES TO BE PROVIDED TO ARCHITECT FOR REVIEW AS REQUESTED UNLESS OTHERWISE SPECIFIED.

CONTRACTOR TO PROVIDE SCHEDULE OF VALUES IN BID MINIMUM ITEMIZED BY CSI DIVISION

REV	DESCRIPTION	BY	DATE

EDWARD J. KOWALCZYK
No. AR11700117
Edward J. Kowalczyk
1-23-25

SCO ENGINEERING, LLC
SOLUTIONS PROVIDED • PROBLEMS SOLVED
FORT WAYNE
6534 Constitution Drive
Fort Wayne, IN 46804
(260) 436-9213
(260) 432-5481 fax
scofw@sco-llc.com

JONES PETRIE RAFINSKI
South Bend, IN
p: 574.232.4388
Fort Wayne, IN
p: 260.422.2522

TOLL ROAD MAINTENANCE BARN
M-2: 4504 N. FAIL RD — LA PORTE, IN 46350
M-4: 7200 N. 600 W — SHIPSHEWANA, IN 46565
M-5: 7565 N. 650 W — ORLAND, IN 46776

ITRCC
3200 CASSOPOLIS STREET
ELKHART, IN 46514

TITLE SHEET/ DRAWING INDEX

DESIGNED BY: EJK
REVIEWED BY: KNB
DRAWN BY: AND
DATE: 1/23/2025
JOB NUMBER: 2024-01323
SCALE: 1/4" = 1'-0"

M2,4,5-0

CODE NOTES:

S-1/B OCCUPANCY

14,800 SQ FT.

DEMOLITION KEYNOTES

1. REMOVE HOLLOW METAL DOOR & FRAME.
2. REMOVE LOCKERS.
3. REMOVE MIRROR AND LIGHT.
4. REMOVE ACT CEILING.
5. REMOVE LIGHT FIXTURES.

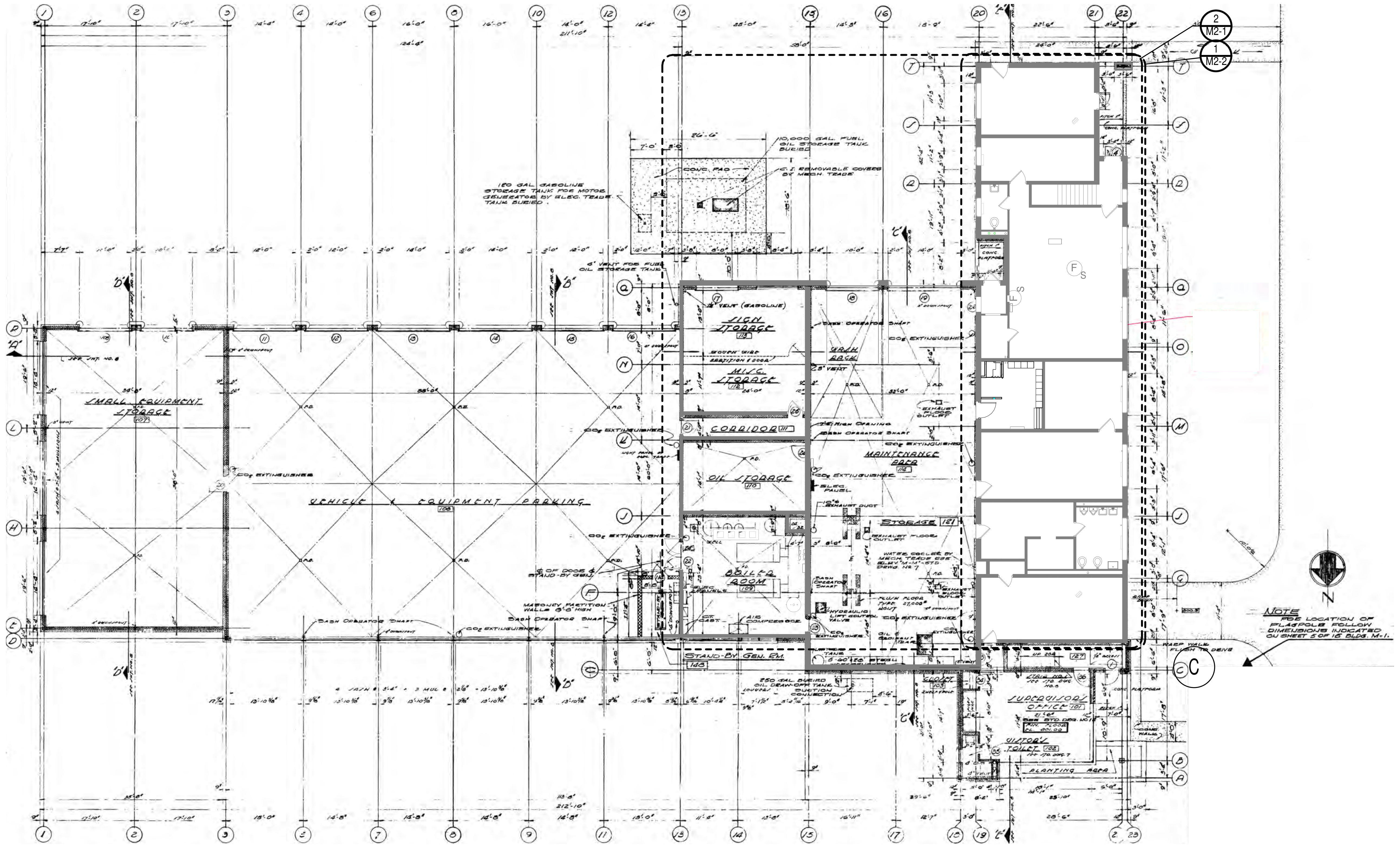
2
M2-1
1
M2-2
SMALL EQUIPMENT STORAGE
VEHICLE & EQUIPMENT PARKING
HIGH STORAGE
MISC STORAGE
CORRIDOR
OIL STORAGE
MAINTENANCE AREA
BOILER ROOM
SUPERVISOR'S OFFICE
N
C
NOTE
FOR LOCATION OF FLAGPOLE FOLLOW DIMENSIONS INDICATED ON SHEET 5 OF 15 BLDG. M-1.

1 M2-1 **M-2 OVERALL FLOOR PLAN**
1/16" = 1'-0"
N

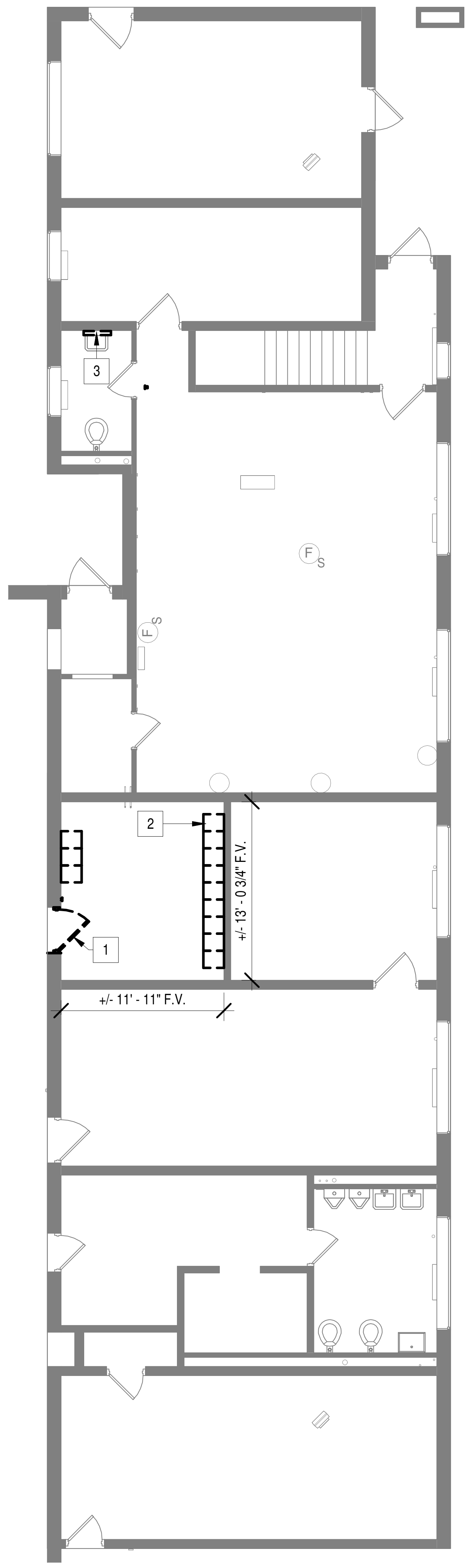
3
F S
2
1
+/- 13' - 0 3/4" F.V.
+/- 11' - 11" F.V.

2 M2-1 **ENLARGED M-2 DEMOLITION PLAN**
1/8" = 1'-0"
N

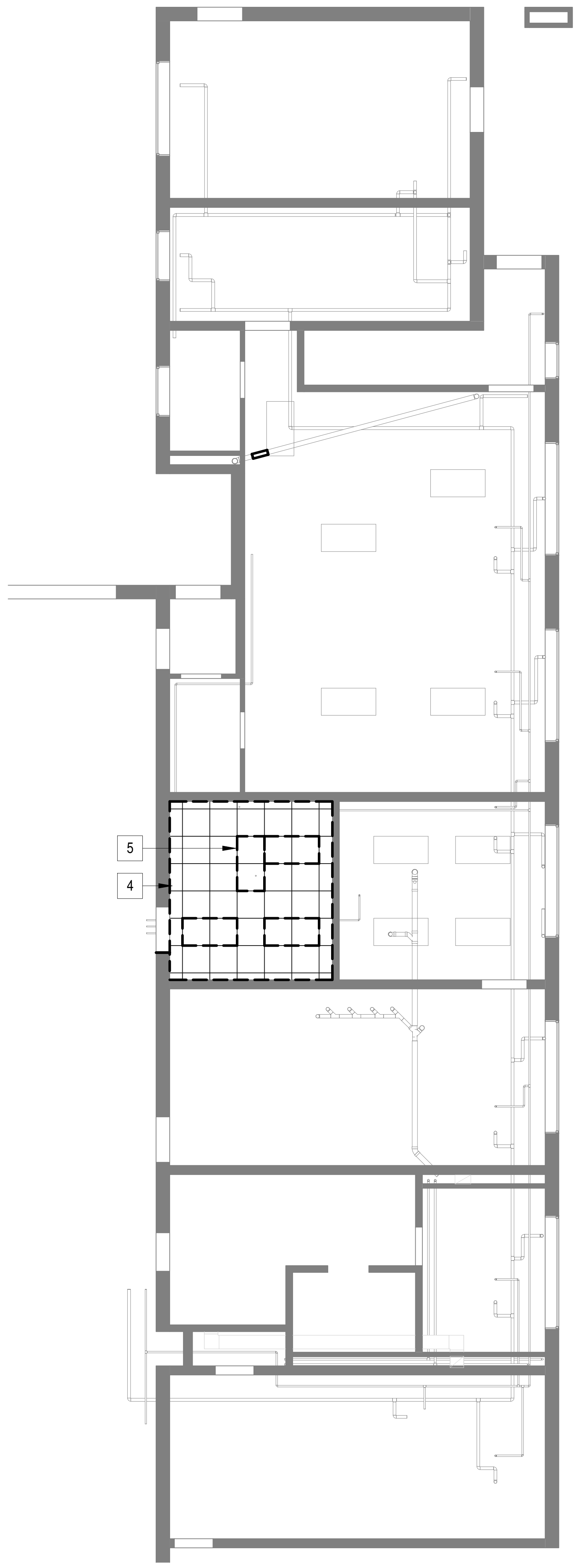

3 M2-1 **M-2 DEMOLITION RCP**
1/8" = 1'-0"
N

1/23/2025 5:12:53 AM

REV	DESCRIPTION	BY	DATE

EDWARD J. KOWALCZYK
No. AR11700117

Edward J. Kowalczyk
1-23-25

SCO ENGINEERING. LLC
SOLUTIONS PROVIDED • PROBLEMS SOLVED
FORT WAYNE
6534 Constitution Drive
Fort Wayne, IN 46804
(260) 436-9213
(260) 432-5481 fax
scofw@sco-llc.com

JONES PETRIE RAFINSKI
South Bend, IN
p: 574.232.4388
Fort Wayne, IN
p: 260.422.2522

TOLL ROAD MAINTENANCE BARN

M-2: 4504 N. FAIL RD
M-4: 7200 N. 600 W
M-5: 7565 N. 650 W

LA PORTE, IN 46350
SHIPSHEWANA, IN 46565
ORLAND, IN 46776

ITRCC

3200 CASSOPOLIS STREET
ELKHART, IN 46514

OVERALL FLOOR PLAN & DEMOLITION PLANS

DESIGNED BY:
EJK

REVIEWED BY:
KNB

DRAWN BY:
AND

DATE: 1/23/2025

JOB NUMBER: 2024-01323

SCALE:
As indicated

M2-1

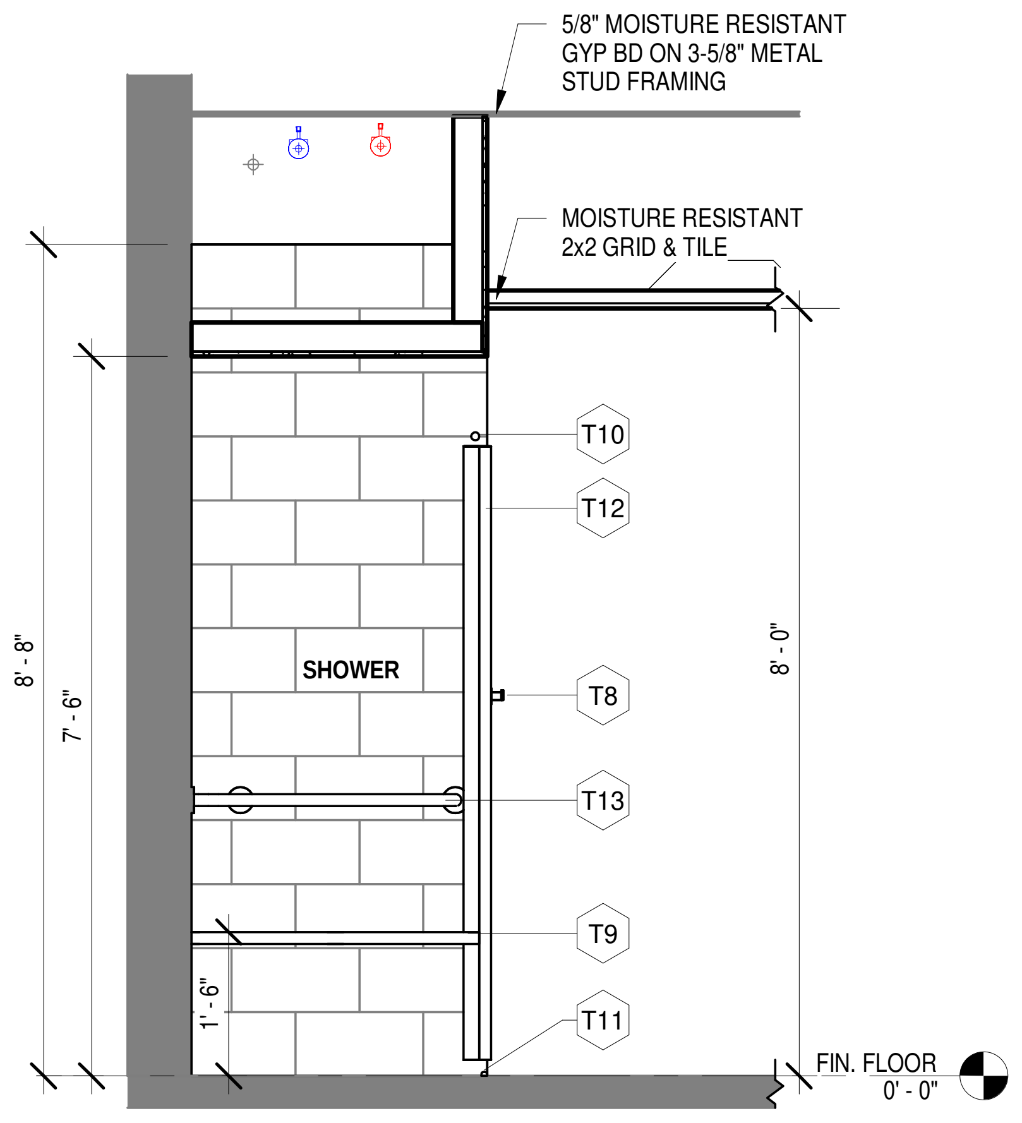
5/8" MOISTURE RESISTANT GYP BD ON 3-5/8" METAL STUD FRAMING
MOISTURE RESISTANT 2x2 GRID & TILE
T10
T12
SHOWER
T8
T13
T9
T11
8' - 8"
7' - 6"
8' - 0"
1' - 6"
FIN. FLOOR
0' - 0"

3 M2-2 M-2 SECTION @ SHOWER
1/2" = 1'-0"

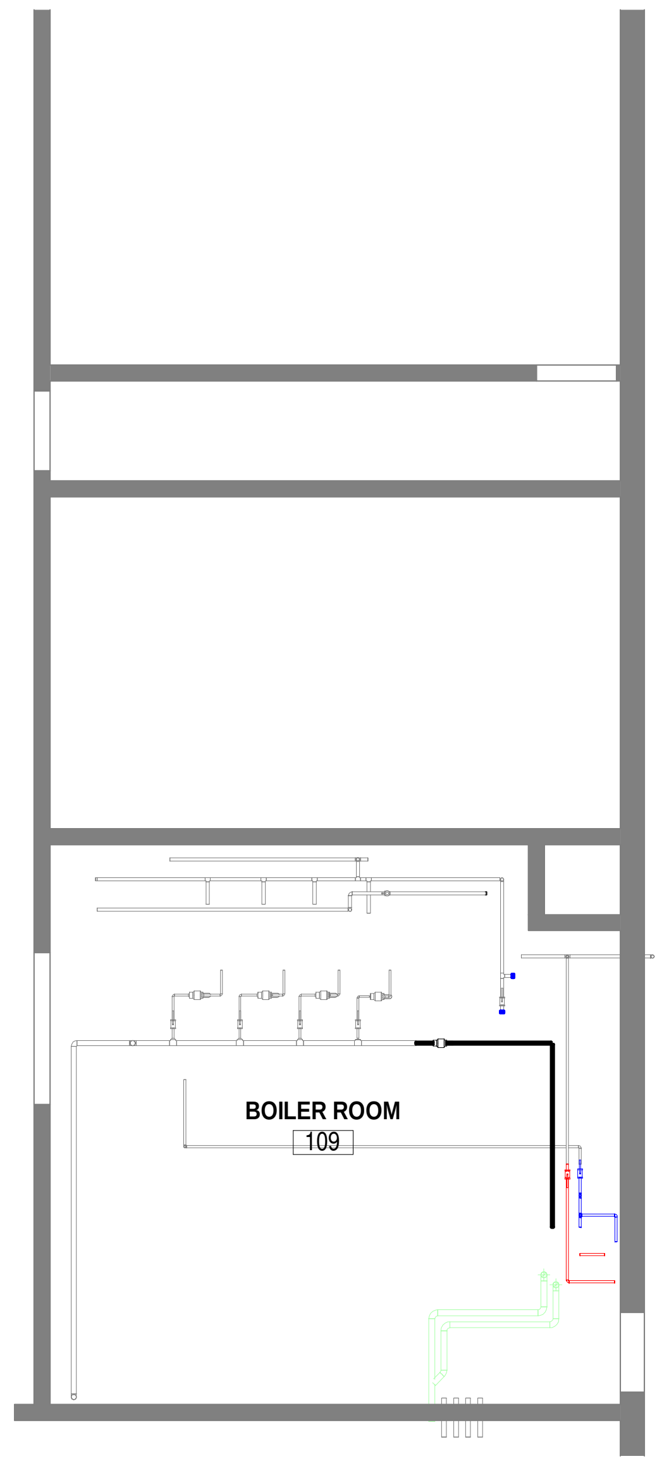

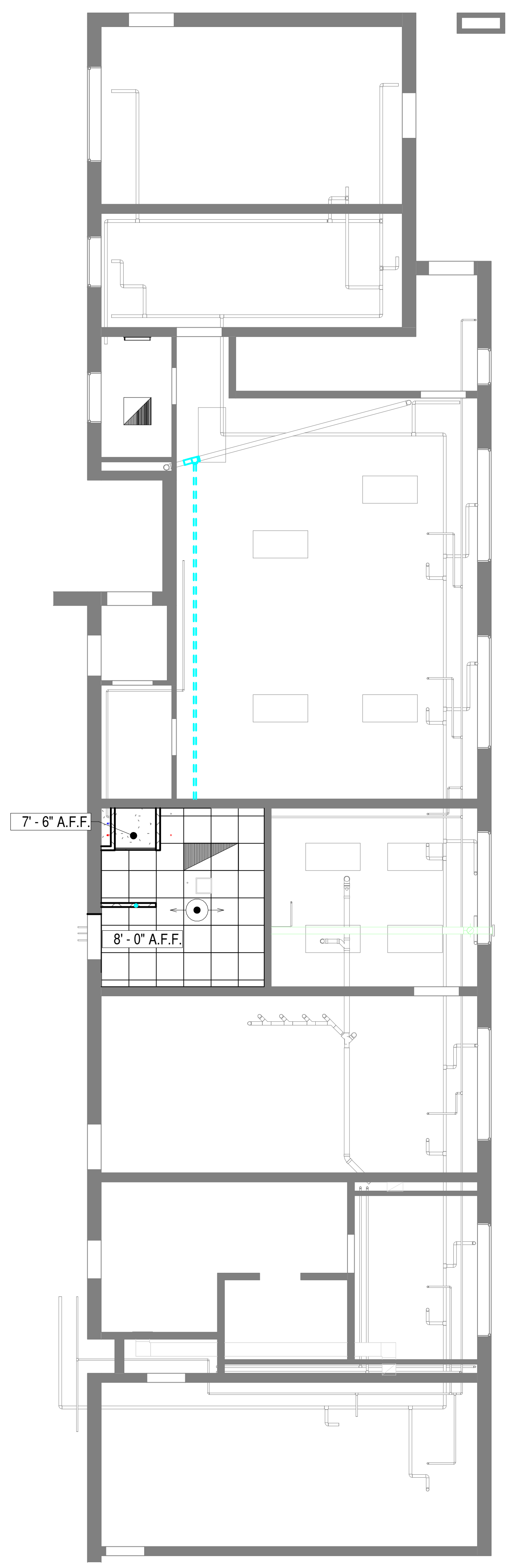

2 M2-2 M-2 REFLECTED CEILING PLAN
1/8" = 1'-0"

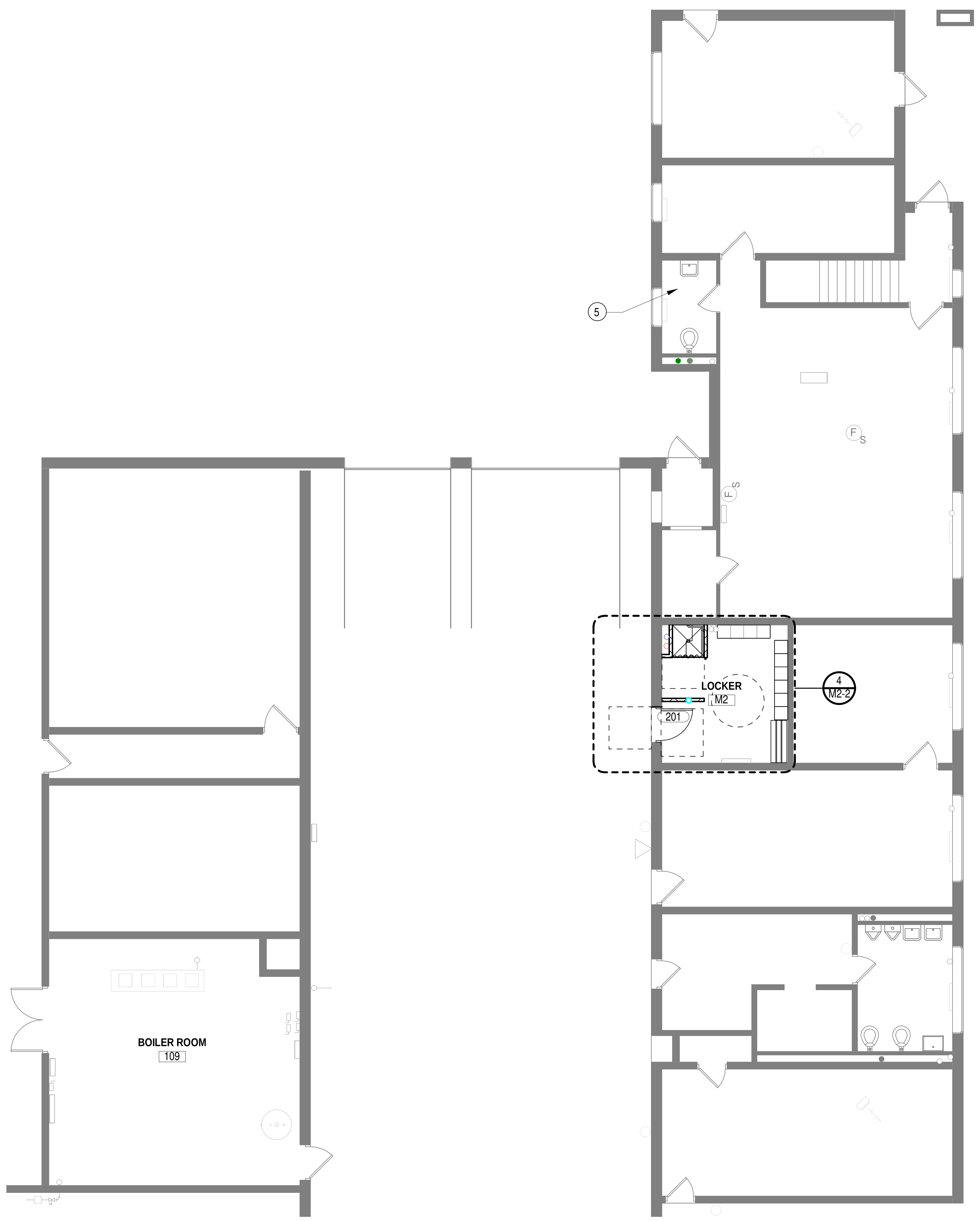

1 M2-2 ENLARGED M-2 FLOOR PLAN
1/8" = 1'-0"

FLOOR PLAN GENERAL NOTES

1. COORDINATE SIZE AND LOCATION OF ALL CONCRETE HOUSEKEEPING PADS AND/OR EQUIPMENT SUPPORTS WITH APPROPRIATE EQUIPMENT MANUFACTURER.
2. COORDINATE SIZE & LOCATION OF ALL ACCESS PANELS WITH TRADE REQUIRING THE SAME. ACCESS PANELS ARE SPECIFIED ARCHITECTURALLY BUT ARE REQUIRED TO BE PROVIDED BY EACH TRADE. ALL LOCATIONS MUST BE COORDINATED & APPROVED BY THE ARCHITECTS FIELD REPRESENTATIVE.
3. CONTRACTORS SHALL VERIFY ALL EXISTING BUILDING DIMENSIONS, PARTITION & WALL LOCATIONS, & FLOOR ELEVATIONS IN THE FIELD & NOTIFY THE ARCHITECTS REPRESENTATIVE OF ANY DISCREPANCIES BEFORE START OF WORK.
4. FLOOR PLANS ARE DIMENSIONED TO FACE OF MASONRY OR STUD FRAMING, U.N.O.
5. DIMENSIONS FOLLOWED BY ± SHOULD BE REVIEWED & ALL NECESSARY ADJUSTMENTS MADE PRIOR TO FABRICATION AND/OR INSTALLATION OF AFFECTED WORK. NOTIFY ARCHITECTS REPRESENTATIVE IF DISCREPANCIES ARISE BEFORE PROCEEDING WITH THE WORK.
6. PROVIDE INTERIOR CMU & GYPSUM BOARD CONTROL JOINTS AT BOTH JAMBS OF DOORS, WINDOWS, & OPENINGS. PROVIDE AT HEAD & SILL OF WINDOWS & PASS THRU OPENINGS.
7. VERIFY QUANTITY, SIZE, & LOCATION OF ALL FLOOR, ROOF, & WALL OPENINGS FOR MECHANICAL & ELECTRICAL WORK WITH THE APPROPRIATE TRADE. PROVIDE ALL OPENINGS SHOWN OR REQUIRED FOR THE COMPLETION OF THE WORK. PROVIDE ALL LINTELS REQUIRED FOR THESE OPENINGS PER SPECIFICATIONS.
8. PROVIDE WOOD BLOCKING WITHIN STUD WALLS FOR WALL MOUNTED ITEMS i.e. GRAB BARS, TOWEL DISPENSERS, WALL STOPS, TOILET PARTITION JAMBS, ETC.
9. PROVIDE NEW BULLNOSE CMU AT JAMBS OF ALL NEW MASONRY OPENINGS.
10. PORTABLE FIRE EXTINGUISHERS SHALL BE SELECTED, INSTALLED & MAINTAINED IN ACCORDANCE WITH SECTION 906 OF THE INTERNATIONAL FIRE CODE & NFPA 10.

FINISH NOTES

1. PRIME AND PAINT ALL INTERIOR WALLS, FLOOR TO CEILING.
NEW BLOCK SW HD Block Filler, Macropoxy 646 2 topcoats of our Acrolon 218 HS Polyurethane
EXISTING BLOCK Macropoxy 646 2 topcoats of our Acrolon 218 HS Polyurethane
2. PATCH AND COAT ALL FLOORS WITH NON-SLIP COATING.
PATCH SW Armorseal Express Patch
PRIMER SW GP3504
TOP COAT SW GP4850
3. ACOUSTICAL CEILING TILE GRID SYSTEM: ARMSTRONG CEILINGS, SUPRAFINE XL HIGH RECYCLED CONTENT, COLOR (WHITE), 9/16" EXPOSED TEE, HOT-DIPPED GALVANIZED STEEL, SEISMIC CATEGORY (DEF), HEAVY DUTY. MAIN BEAM: 7501HRC 12FT HD MAIN BEAM, 144" X 9/16" X 1-11/16". CROSS TEE: XL7520HRC 2FT CROSS TEE HRC, 24" X 9/16" X 1-11/16"
4. ACOUSTICAL CEILING TILES: ARMSTRONG CEILINGS, KITCHEN ZONE, COLOR (WHITE), 24" X 24", THICKNESS (5/8"), EDGE (SQUARE LAY-IN 15/16"), MATERIAL (MINERAL FIBER), CAC (33), FIRE PERFORMANCE (CLASS A (UL)), LIGHT REFLECTANCE (89%), MOLD/MILDEW RESISTANCE (BIOBLOCK), SAG/HUMIDITY RESISTANCE (HUMIGUARD PLUS)

REFLECTED CEILING PLAN NOTES

1. REFER TO ELECTRICAL DRAWINGS FOR FIXTURE TYPES. REFER TO ELECTRICAL AND MECHANICAL DRAWINGS FOR ADDITIONAL INFORMATION PERTAINING TO ELECTRICAL AND MECHANICAL WORK.
2. COORDINATE SIZE AND LOCATION OF ALL ACCESS PANELS WITH TRADE REQUIRING THE SAME. ACCESS PANELS ARE SPECIFIED ARCHITECTURALLY BUT ARE REQUIRED TO BE PROVIDED BY TRADE. SPOT ALL LOCATIONS WITHIN FIXED GYPSUM BOARD CEILINGS AND RECEIVE APPROVAL FROM THE ARCHITECT'S FIELD REPRESENTATIVE BEFORE PLACEMENT.
3. COORDINATE CEILING SUSPENSION SYSTEMS WITH OTHER CEILING SPACE EQUIPMENT SUPPORTS.
4. ALL GYPSUM BOARD FASCIAS @ SOFFITS, ADJACENT TO LAY-IN CEILINGS, SHALL EXTEND 4"MINIMUM ABOVE LAY-IN CEILINGS, U.N.O.
5. PROVIDE WOOD BLOCKING, ABOVE GYPSUM BOARD CEILINGS, AS REQUIRED FOR MISCELLANEOUS SUSPENDED ITEMS (e.g. CURTAIN TRACKS, WINDOW SHADES, ACOUSTICAL BAFFLES, ETC.)

(#) PLAN KEYNOTES

1. NEW 4" W x 8" H x 16" L CMU WALL
2. NEW DOOR & CMU IN-FILL
3. NEW LOCKERS: SCHOOLLOCKERS.COM, SKU (61151572QS1), COLOR (GRAY), 15" WIDE X 15" DEEP X 78" HIGH (INCLUDING 6" LEGS)
4. BENCH: GLOBAL INDUSTRIAL™, LOCKER ROOM BENCH, MODEL # (W493705) HARDWOOD W/ TRAPEZOID LEGS, COLOR (NATURAL), MOUNTING STYLE (BOLT DOWN), 48" WIDE X 9-1/2" DEEP X 17" HIGH
5. NEW CEILING, FLOOR AND BASE, PAINT WALLS

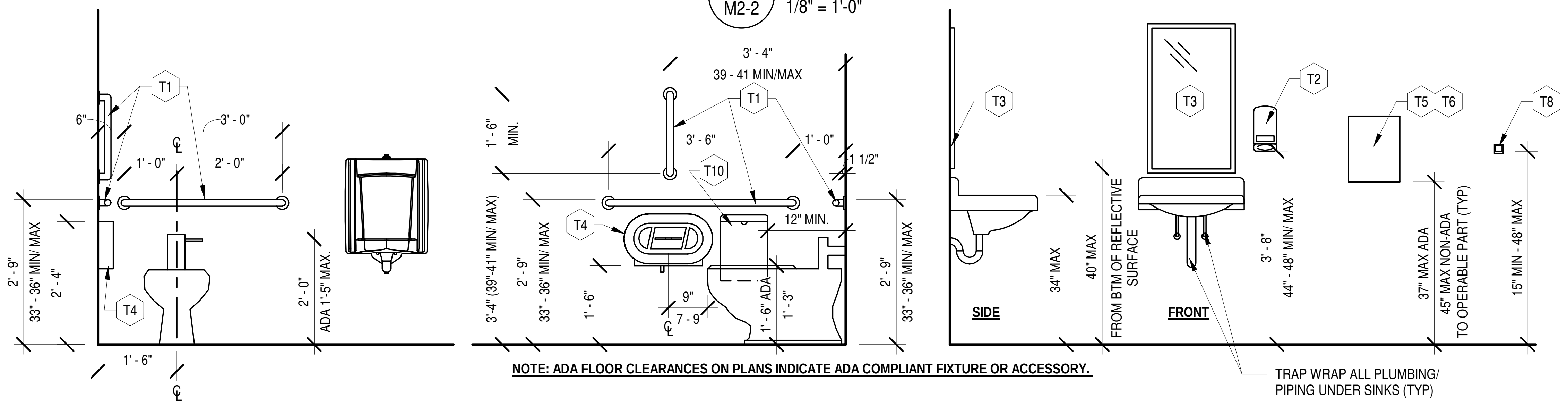

NOTE: ADA FLOOR CLEARANCES ON PLANS INDICATE ADA COMPLIANT FIXTURE OR ACCESSORY.

TRAP WRAP ALL PLUMBING/ PIPING UNDER SINKS (TYP)

5 M2-2 TOILET ACCESSORIES MOUNTING HEIGHTS (M-2)
1/2" = 1'-0"

M-2 DOOR SCHEDULE

	DOOR						FRAME								
MARK	WIDTH	HEIGHT	THICKNESS	MATERIAL	DR FIN	ELEV TYPE	MATERIAL	FR FIN	ELEV TYPE	HEAD	JAMB	SILL	HARDWARE SET	Fire Rating	COMMENTS
201	3' - 0"	7' - 0"	0' - 1 3/4"												

RCP LEGEND

SYMBOL	DESCRIPTION	REMARKS
▦	A.C.T AND GRID	SEE "FINISH NOTES"
▨	GYP BOARD CEILING	SEE "FINISH NOTES"
▭	1'-3" x 4' FIXTURE	CEILING MOUNTED
▬	VANITY LIGHT	WALL MOUNTED
◎	6" RECESSED	
⊗	EXIT SIGN	WALL MOUNTED
⊔	EMERGENCY LIGHT	WALL MOUNTED
◩	RETURN AIR GRILLE	
⊠	SUPPLY AIR DIFFUSER	
Ⓜ	EXHAUST FAN	

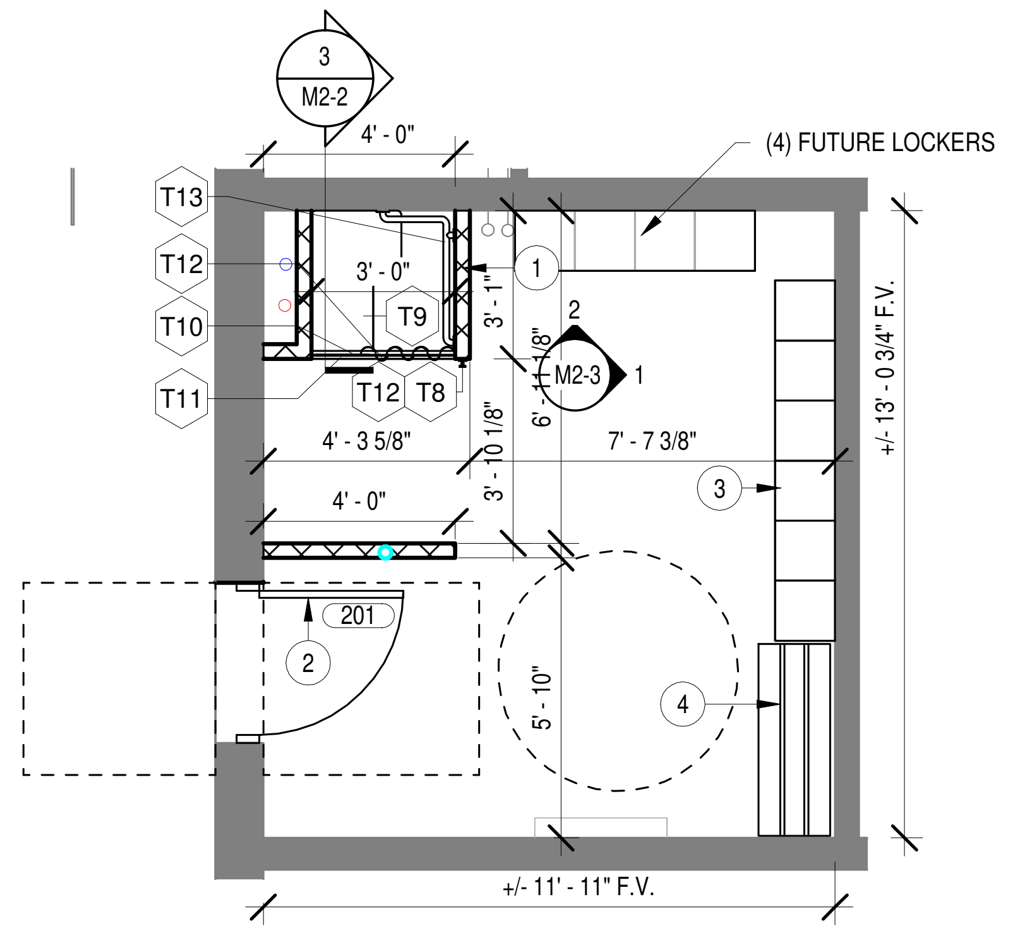

4 M2-2 M-2 LOCKER ROOM PLAN
1/4" = 1'-0"

TOILET ACCESSORIES

TAG	MANUF	MODEL	REMARKS
T8	BOBRICK	B-76717	SURFACE-MOUNTED SINGLE ROBE HOOK, SATIN FINISH: 18-8, TYPE-304, 22-GAUGE (0.8MM) STAINLESS STEEL. CONCEALED, 18-GAUGE (1.2MM) STAINLESS STEEL MOUNTING BRACKET. ALL-WELDED CONSTRUCTION. SECURED TO WALL PLATE W/ A STAINLESS STEEL SETSCREW. FLANGE IS 2″ X 2″ (50 X 50MM). HOOK IS 1-5/8″ HIGH, 13/16″ WIDE (40 X 20MM). PROJECTS 1 5/8″ (40MM) FROM WALL.
T9	BOBRICK	B-5181	ADA SHOWER SEAT: ONE-PIECE, 1/2" (13MM) THICK, COMPACT-GRADE LAMINATE W/ MATTE-FINISH, IVORY-COLORED, MELAMINE SURFACES & BLACK PHENOLIC-RESIN CORE — CANNOT DELAMINATE. INTEGRAL SLOTS FOR WATER DRAINAGE. 18-8, TYPE-304 STAINLESS STEEL W/ SATIN FINISH, 16-GAUGE (1.6MM), 1-1/4" (30MM) SQUARE TUBING & 18-GAUGE (1.2MM), 1" (25MM) DIA. SEAMLESS TUBING.SH, 16-GAUGE (1.6MM), 1-1/4" (30MM) SQUARE TUBING & 18-GAUGE (1.2MM), 1" (25MM) DIA. SEAMLESS TUBING.
T10	BOBRICK	B-207-26	CURTAIN ROD: HEAVY DUTY SHOWER CURTAIN ROD W/ CONCEALED MOUNTING, 18-8, TYPE-304, 20-GUAGE (1.0MM) STAINLESS STEEL TUBING W/ SATIN FINISH, 1" (25MM) OUTSIDE DIA.
T11	TBD	TBD	RUBBER SEAL FOR FLOOR
T12	BOBRICK	B-204-2	CURTAIN: VINYL SHOWER CURTAINS, COLOR (OPAQUE MATTE WHITE), .008" (0.2MM) THICK, WHITE HDPE GROMMETS ALONG TOP (ONE EVERY 6" (150MM)), HEMMED BOT. & SIDES, 7 HOOKS REQUIRED (NOT INCLUDED), 42" WIDE X 72" HIGH. USE BRADLEY HANGERS, MODEL 9540, STAINLESS STEEL SPRING WIRE W/ SNAP FASTENER. ROLLERS ARE BRASS W/ NICKEL PLATING. FIVE ROLLERS PER HOOK. CAN BE USED W/ 1" & 1-1/4" DIA. CURTAIN RODS.
T13	BOBRICK	B-6861	ADA SHOWER GRAB BAR

1/23/2025 5:12:57 AM

REV	DESCRIPTION	BY	DATE

EDWARD J. KOWALCZYK
No. AR11700117
Edward J. Kowalczyk
1-23-25

SCO ENGINEERING, LLC
SOLUTIONS PROVIDED • PROBLEMS SOLVED
FORT WAYNE
6534 Constitution Drive
Fort Wayne, IN 46804
(260) 436-9213
(260) 432-5481 fax
scofw@sco-llc.com

JONES PETRIE RAFINSKI
South Bend, IN
p: 574.232.4388
Fort Wayne, IN
p: 260.422.2522

TOLL ROAD MAINTENANCE BARN
M-2: 4504 N. FAIL RD
M-4: 7200 N. 600 W
M-5: 7565 N. 650 W
LA PORTE, IN 46350
SHIPSHEWANA, IN 46565
ORLAND, IN 46776

ITRCC
3200 CASSOPOLIS STREET
ELKHART, IN 46514

FLOOR PLAN, REFLECTED CEILING PLAN, ENLARGED PLANS, AND WALL SECTION

DESIGNED BY: EJK
REVIEWED BY: KNB
DRAWN BY: AND
DATE: 1/23/2025
JOB NUMBER: 2024-01323
SCALE: As indicated

M2-2

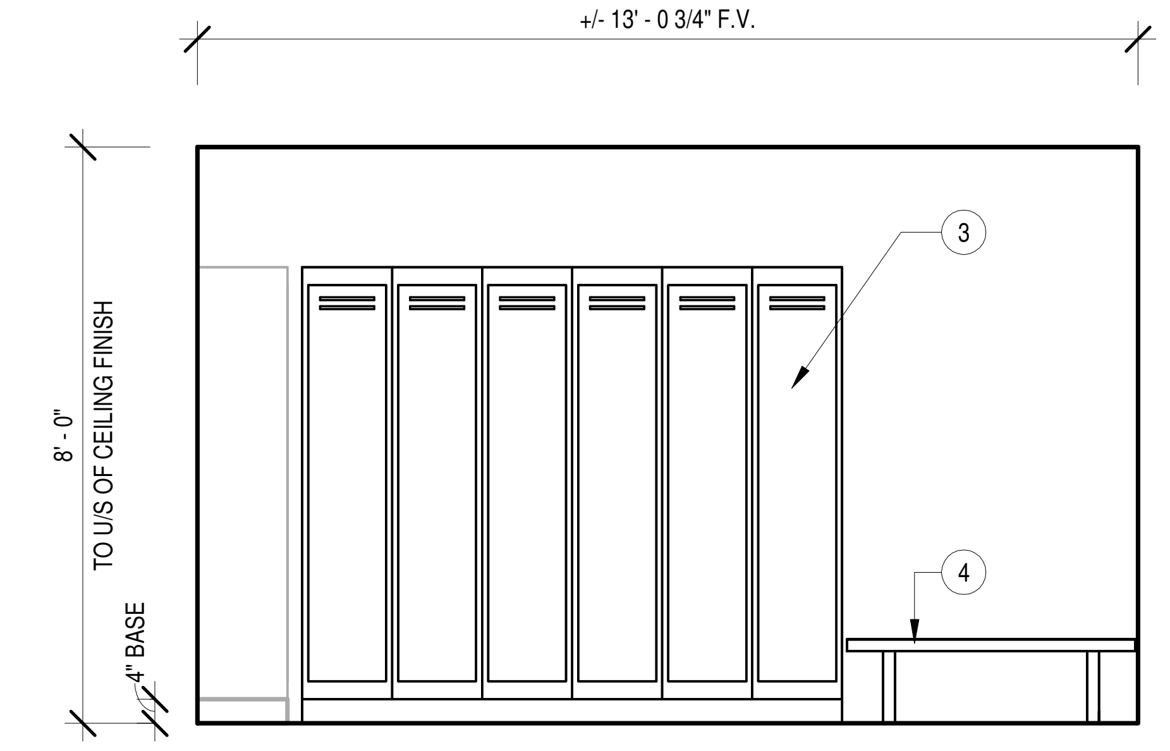
+/- 13' - 0 3/4" F.V.
8' - 0"
TO U/S OF CEILING FINISH
4" BASE
3
4

M-2 LOCKER ROOM - WEST ELEV.

1
M2-3
3/8" = 1'-0"

NOTE: REFER TO SHEET M2-2/PLAN KEYNOTES

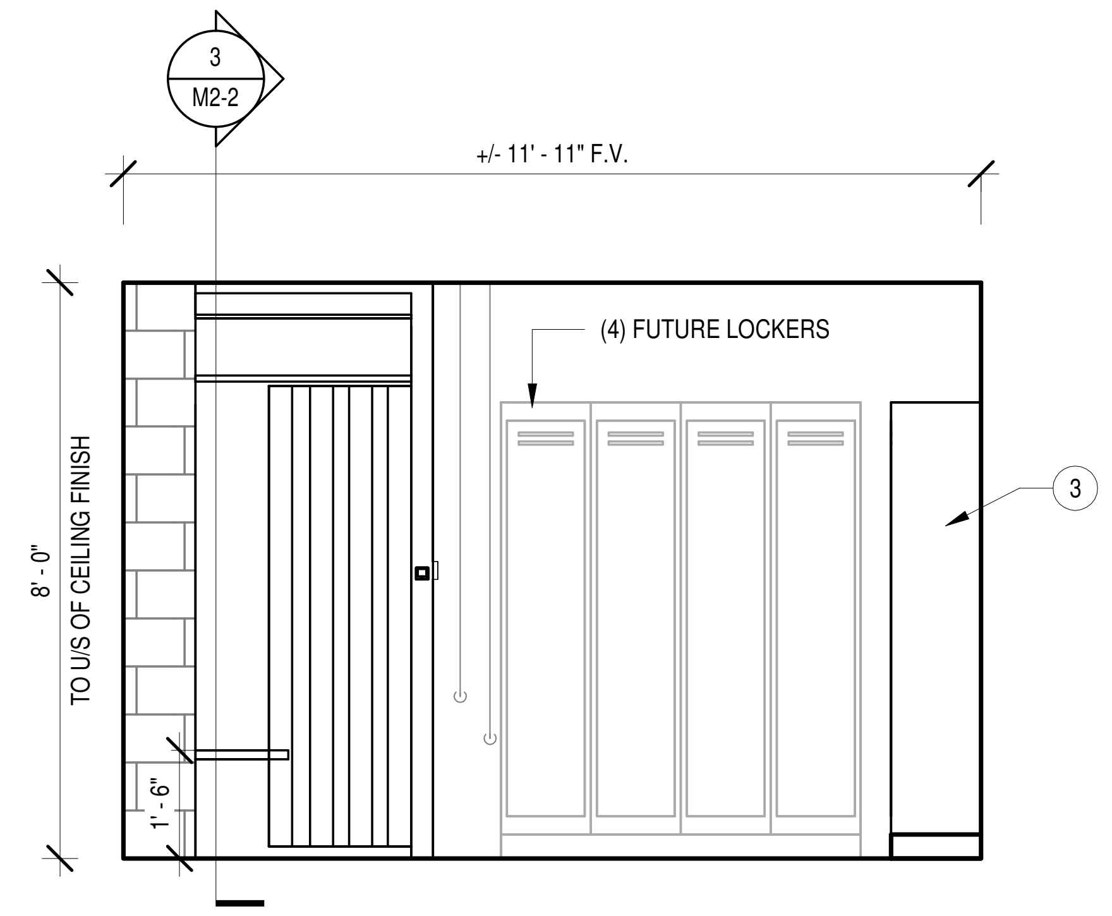
3
M2-2
+/- 11' - 11" F.V.
(4) FUTURE LOCKERS
3
8' - 0"
TO U/S OF CEILING FINISH
1' - 6"

M-2 LOCKER ROOM - SOUTH ELEV.

2
M2-3
3/8" = 1'-0"

NOTE: REFER TO SHEET M2-2/PLAN KEYNOTES

REV	DESCRIPTION	BY	DATE

EDWARD J. KOWALCZYK
No. AR11700117
Edward J. Kowalczyk
1-23-25

SCO ENGINEERING, LLC
SOLUTIONS PROVIDED • PROBLEMS SOLVED
FORT WAYNE
6534 Constitution Drive
Fort Wayne, IN 46804
(260) 436-9213
(260) 432-5481 fax
scofw@sco-llc.com

JONES
PETRIE
RAFINSKI
South Bend, IN
p: 574.232.4388
Fort Wayne, IN
p: 260.422.2522

TOLL ROAD MAINTENANCE BARN

M-2: 4504 N. FAIL RD LA PORTE, IN 46350
M-4: 7200 N. 600 W SHIPSHEWANA, IN 46565
M-5: 7565 N. 650 W ORLAND, IN 46776

ITRCC

3200 CASSOPOLIS STREET ELKHART, IN 46514

ELEVATIONS

DESIGNED BY: EJK

REVIEWED BY: KNB

DRAWN BY: AND

DATE: 1/23/2025

JOB NUMBER: 2024-01323

SCALE: 3/8" = 1'-0"

M2-3

1/23/2025 5:12:57 AM

CODE NOTES:

S-1/B OCCUPANCY

14,800 SQ FT.

DEMOLITION KEYNOTES

#	
1.	REMOVE HOLLOW METAL DOOR & FRAME.
2.	REMOVE METAL JAMB CHANNELS.
3.	REMOVE LIGHT FIXTURES.
4.	REFER TO MECHANICAL SHEETS FOR EQUIPMENT REMOVAL.

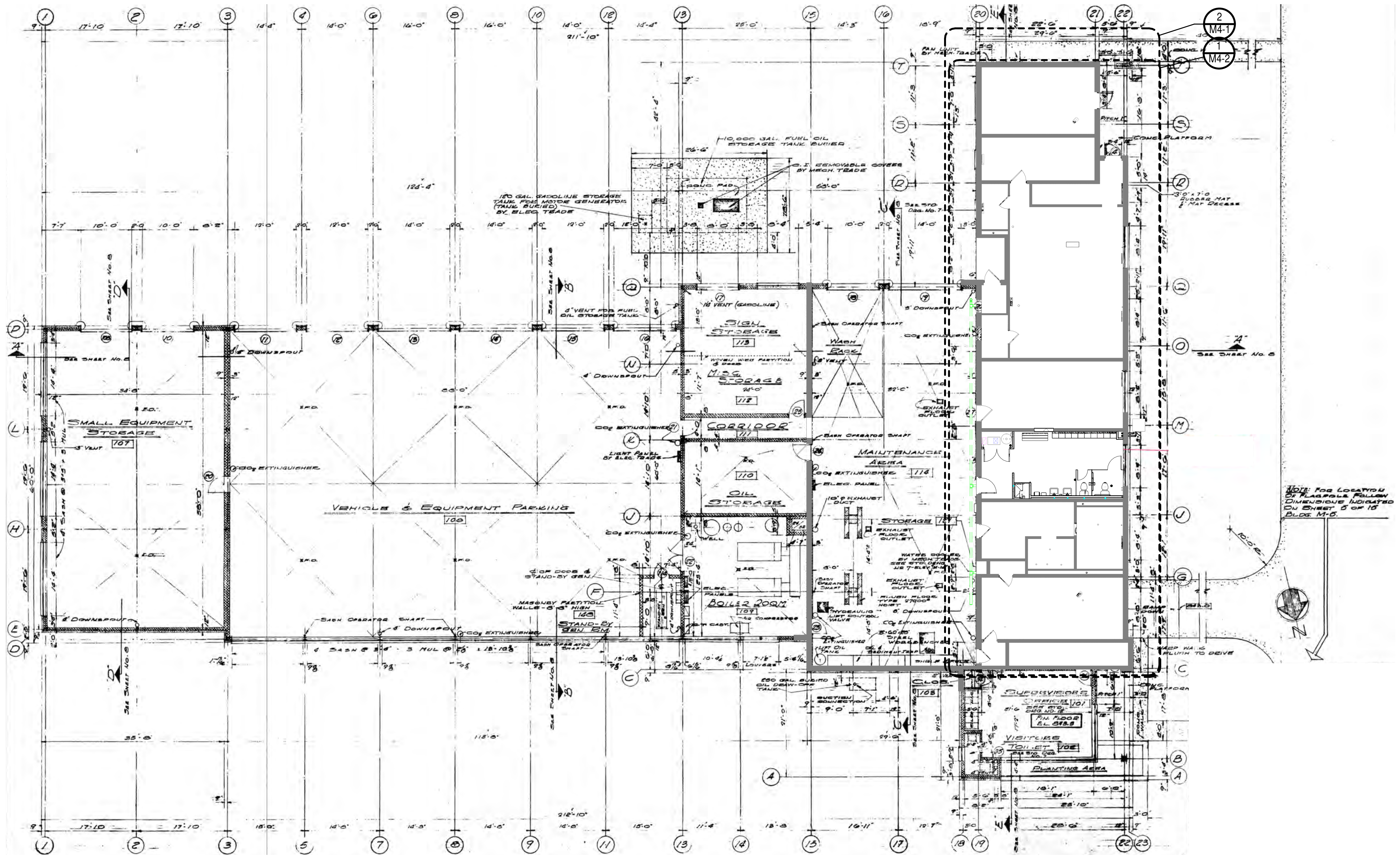
M4-1
M4-2
VEHICLE & EQUIPMENT PARKING
SMALL EQUIPMENT STORAGE
CORRIDOR
OIL STORAGE
BOILER ROOM

1 M4-1 **M-4 OVERALL FLOOR PLAN**
1/16" = 1'-0"

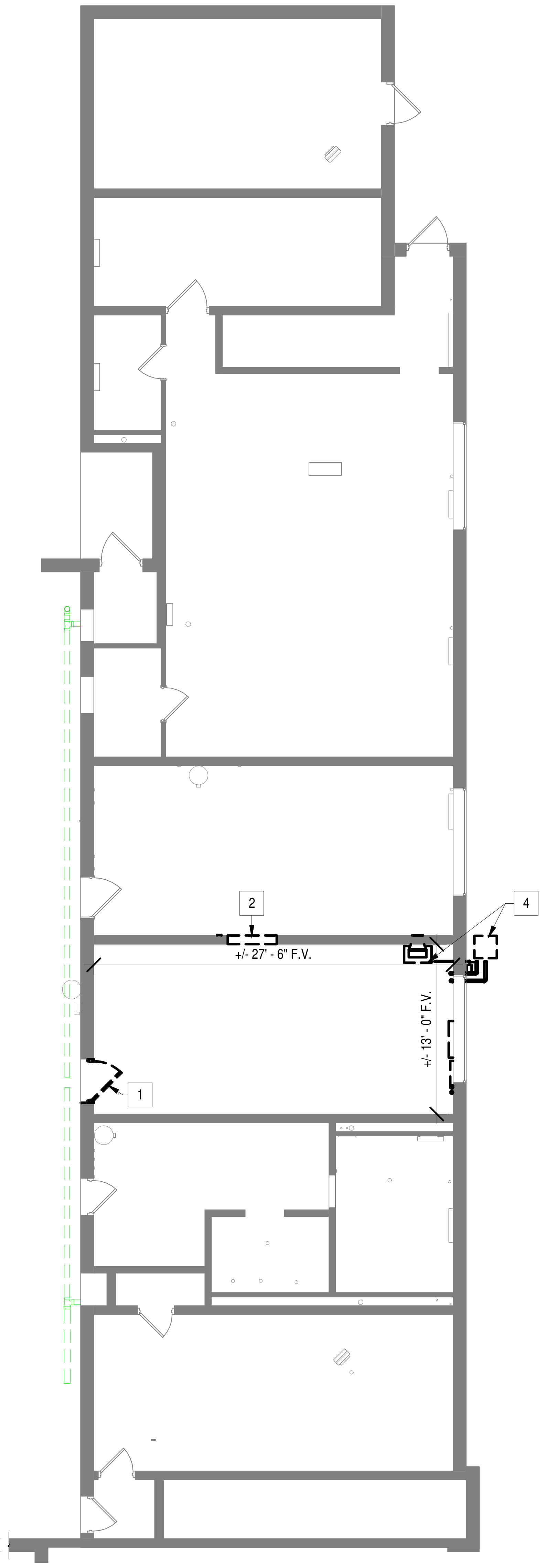
2
4
+/- 27' - 6" F.V.
+/- 13' - 0" F.V.
1

2 M4-1 **ENLARGED M-4 DEMOLITION PLAN**
1/8" = 1'-0"

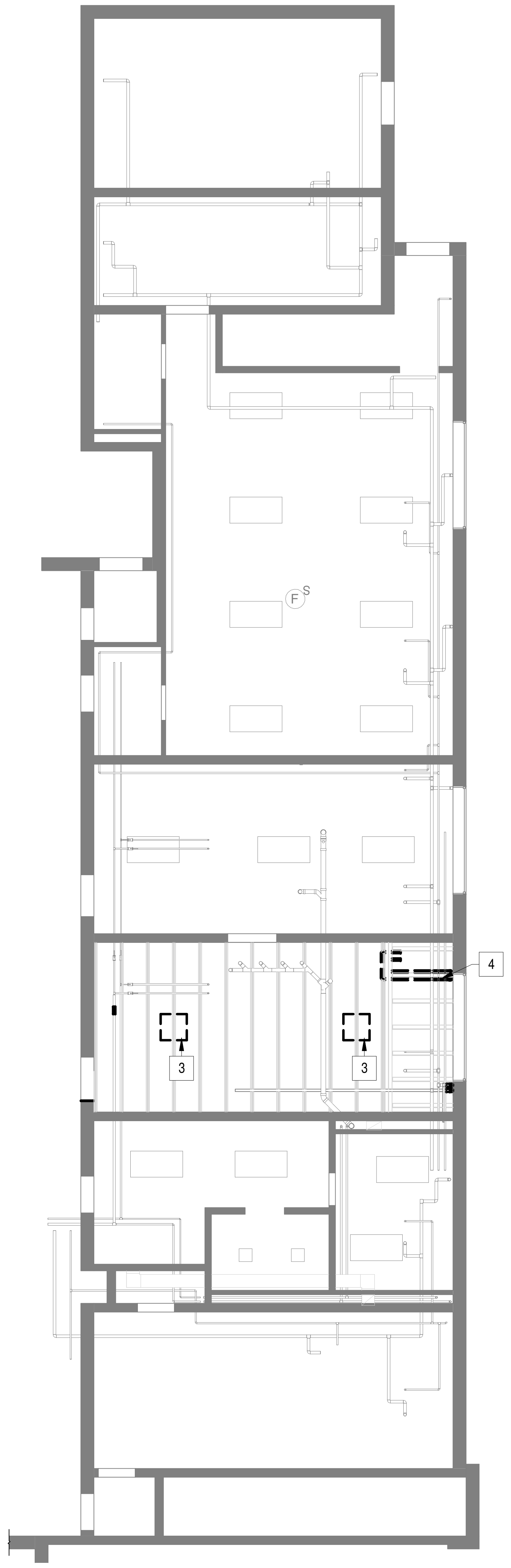

3 M4-1 **M-4 DEMOLITION RCP**
1/8" = 1'-0"

1/23/2025 5:13:05 AM

REV	DESCRIPTION	BY	DATE

EDWARD J. KOWALCZYK
No. AR11700117
Edward J. Kowalczyk
1-23-25

SCO ENGINEERING, LLC
SOLUTIONS PROVIDED • PROBLEMS SOLVED
FORT WAYNE
6534 Constitution Drive
Fort Wayne, IN 46804
(260) 436-9213
(260) 432-5481 fax
scofw@sco-llc.com

JONES PETRIE RAFINSKI
South Bend, IN
p: 574.232.4388
Fort Wayne, IN
p: 260.422.2522

TOLL ROAD MAINTENANCE BARN
M-2: 4504 N. FAIL RD
M-4: 7200 N. 600 W
M-5: 7565 N. 650 W
LA PORTE, IN 46350
SHIPSHEWANA, IN 46565
ORLAND, IN 46776

ITRCC
3200 CASSOPOLIS STREET
ELKHART, IN 46514

OVERALL FLOOR PLAN & DEMOLITION PLANS

DESIGNED BY:	EJK
REVIEWED BY:	KNB
DRAWN BY:	AND
DATE:	1/23/2025
JOB NUMBER:	2024-01323
SCALE:	As indicated

M4-1

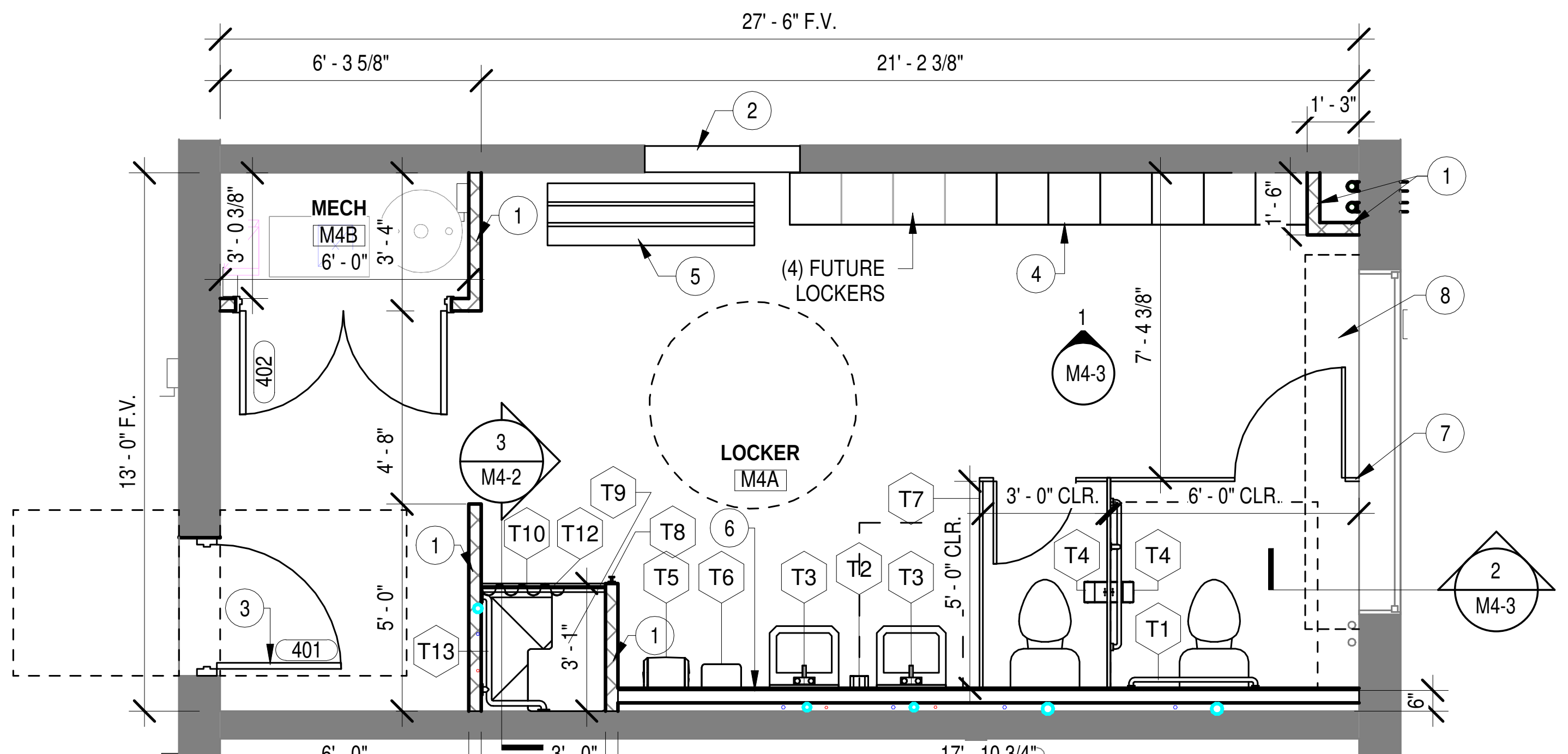
27' - 6" F.V.
6' - 3 5/8"
21' - 2 3/8"
1' - 3"
2
1
MECH
M4B
3' - 0 3/8"
6' - 0"
3' - 4"
1
5
(4) FUTURE LOCKERS
4
1' - 6"
8
1
M4-3
7' - 4 3/8"
402
13' - 0" F.V.
4' - 8"
3
M4-2
LOCKER
M4A
7
T9
T10
T12
T8
6
T7
3' - 0" CLR.
6' - 0" CLR.
T5
T6
T3
T2
T3
T4
T4
2
M4-3
1
5' - 0"
3
401
T13
3' - 1"
1
5' - 0" CLR.
T1
6"
6' - 0"
3' - 0"
17' - 10 3/4"

6 M4-2 M-4 RESTROOM PLAN

1/4" = 1'-0"

N

TAG	MANUF	MODEL	REMARKS
T1	BOBRICK	#6806	GRAB BAR
T2	TBD	TBD	WALL MOUNTED SOAP DISPENSER
T3	BOBRICK	B-165-1836	MIRROR
T4	BOBRICK	B-288	SURFACE MOUNT TOILET PAPER HOLDER:
T5		PAPER TOWEL DISPENSER	
T6		WARM AIR DRYER (XLERATOR HAND DRYER XL- BW WHITE THERMOSET	
T7	TBD	TBD	TOILET PARTITION
T8	BOBRICK	B-76717	SURFACE-MOUNTED SINGLE ROBE HOOK, SATIN FINISH: 18-8, TYPE-304, 22-GAUGE (0.8MM) STAINLESS STEEL. CONCEALED, 18-GAUGE (1.2MM) STAINLESS STEEL MOUNTING BRACKET. ALL-WELDED CONSTRUCTION. SECURED TO WALL PLATE W/ A STAINLESS STEEL SETSCREW. FLANGE IS 2″ X 2″ (50 X 50MM). HOOK IS 1-5/8″ HIGH, 13/16″ WIDE (40 X 20MM). PROJECTS 1 5/8″ (40MM) FROM WALL.
T9	BOBRICK	B-5181	ADA SHOWER SEAT: ONE-PIECE, 1/2" (13MM) THICK, COMPACT-GRADE LAMINATE W/ MATTE-FINISH, IVORY-COLORED, MELAMINE SURFACES & BLACK PHENOLIC-RESIN CORE — CANNOT DELAMINATE. INTEGRAL SLOTS FOR WATER DRAINAGE. 18-8, TYPE-304 STAINLESS STEEL W/ SATIN FINISH, 16-GAUGE (1.6MM), 1-1/4" (30MM) SQUARE TUBING & 18-GAUGE (1.2MM), 1" (25MM) DIA. SEAMLESS TUBING.SH, 16-GAUGE (1.6MM), 1-1/4" (30MM) SQUARE TUBING & 18-GAUGE (1.2MM), 1" (25MM) DIA. SEAMLESS TUBING.
T10	BOBRICK	B-207-26	CURTAIN ROD: HEAVY DUTY SHOWER CURTAIN ROD W/ CONCEALED MOUNTING, 18-8, TYPE-304, 20-GUAGE (1.0MM) STAINLESS STEEL TUBING W/ SATIN FINISH, 1" (25MM) OUTSIDE DIA.
T11	TBD	TBD	RUBBER SEAL FOR FLOOR
T12	BOBRICK	B-204-2	CURTAIN: VINYL SHOWER CURTAINS, COLOR (OPAQUE MATTE WHITE), .008" (0.2MM) THICK, WHITE HDPE GROMMETS ALONG TOP (ONE EVERY 6" (150MM)), HEMMED BOT. & SIDES, 7 HOOKS REQUIRED (NOT INCLUDED), 42" WIDE X 72" HIGH. USE BRADLEY HANGERS, MODEL 9540, STAINLESS STEEL SPRING WIRE W/ SNAP FASTENER. ROLLERS ARE BRASS W/ NICKEL PLATING. FIVE ROLLERS PER HOOK. CAN BE USED W/ 1" & 1-1/4" DIA. CURTAIN RODS.
T13	BOBRICK	B-6861	ADA SHOWER GRAB BAR

T# TOILET ACCESSORIES

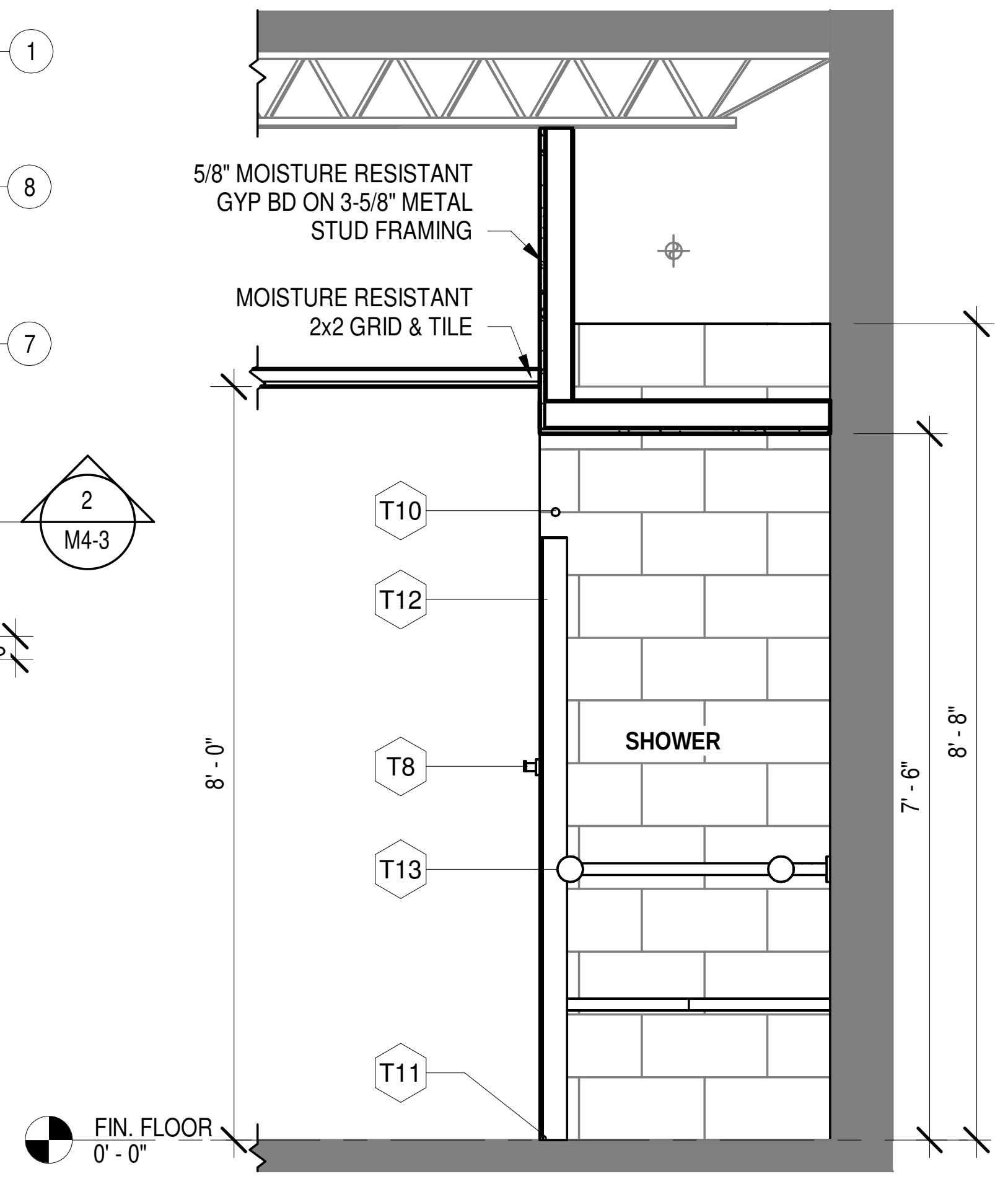
5/8" MOISTURE RESISTANT GYP BD ON 3-5/8" METAL STUD FRAMING
MOISTURE RESISTANT 2x2 GRID & TILE
T10
T12
SHOWER
T8
T13
T11
8' - 0"
7' - 6"
8' - 8"
FIN. FLOOR 0' - 0"

3 M4-2 M-4 SECTION @ SHOWER

1/2" = 1'-0"

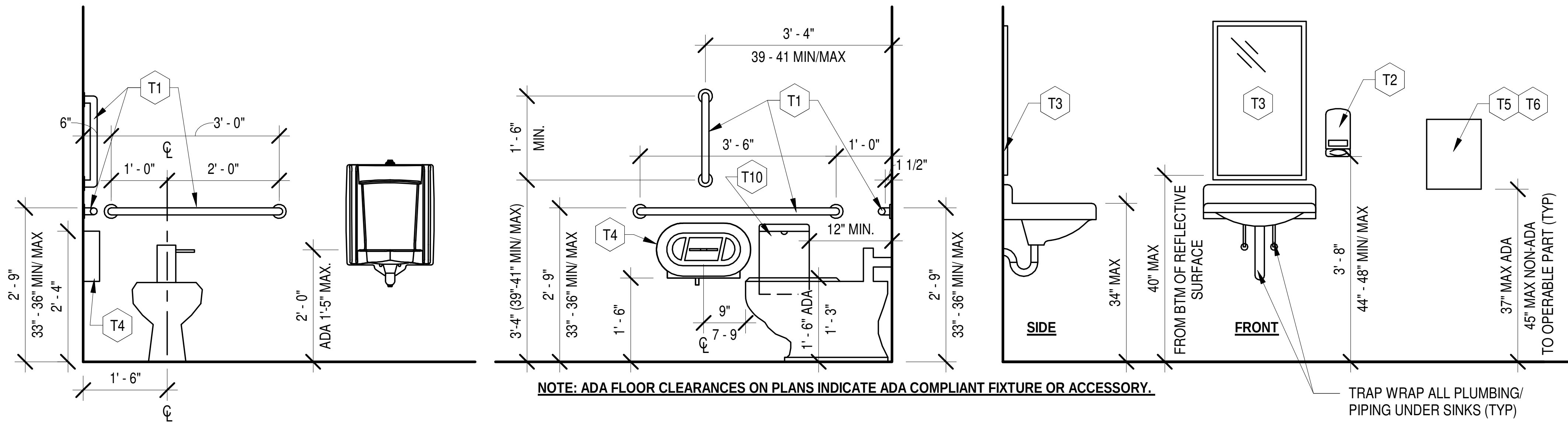
T1
6"
3' - 0"
1' - 0"
2' - 0"
2' - 9"
33" - 36" MIN/ MAX
2' - 4"
T4
1' - 6"
2' - 0"
ADA 1'-5" MAX.
3' - 4"
39 - 41 MIN/MAX
1' - 6"
MIN.
T1
3' - 6"
1' - 0"
1 1/2"
T10
T4
12" MIN.
3'-4" (39"-41" MIN/ MAX)
2' - 9"
33" - 36" MIN/ MAX
1' - 6"
9"
7 - 9
1' - 6" ADA
1' - 3"
2' - 9"
33" - 36" MIN/ MAX
T3
SIDE
34" MAX
40" MAX
FROM BTM OF REFLECTIVE SURFACE
T3
FRONT
T2
3' - 8"
44" - 48" MIN/ MAX
T5
T6
37" MAX ADA
45" MAX NON-ADA
TO OPERABLE PART (TYP)
T8
15" MIN - 48" MAX
NOTE: ADA FLOOR CLEARANCES ON PLANS INDICATE ADA COMPLIANT FIXTURE OR ACCESSORY.
TRAP WRAP ALL PLUMBING/ PIPING UNDER SINKS (TYP)

4 M4-2 TOILET MOUNTING HEIGHTS (M-4)

1/2" = 1'-0"

M-4 DOOR SCHEDULE

MARK	DOOR						FRAME						HARDWARE SET	Fire Rating	COMMENTS
	WIDTH	HEIGHT	THICKNESS	MATERIAL	DR FIN	ELEV TYPE	MATERIAL	FR FIN	ELEV TYPE	HEAD	JAMB	SILL			
401	3' - 0"	7' - 0"	0' - 1 3/4"												
402	5' - 0"	7' - 0"	0' - 1 3/4"												

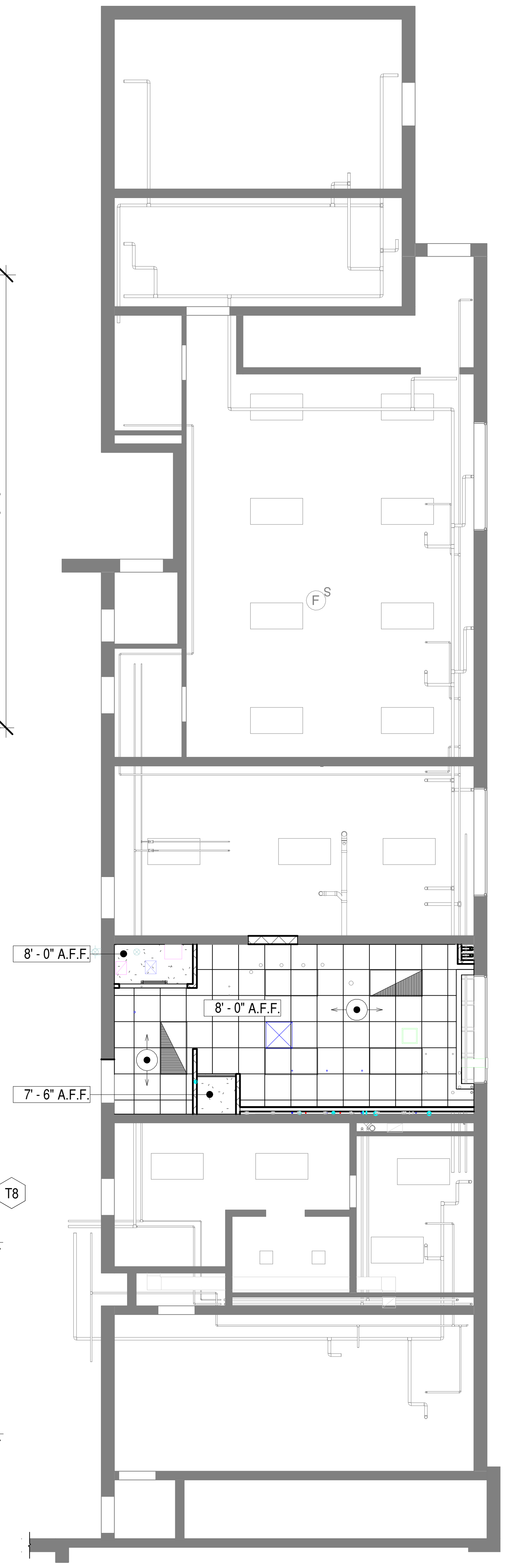
8' - 0" A.F.F.
8' - 0" A.F.F.
7' - 6" A.F.F.

2 M4-2 M-4 REFLECTED CEILING PLAN

1/8" = 1'-0"

N

RCP LEGEND

SYMBOL	DESCRIPTION	REMARKS
▦	A.C.T AND GRID	SEE "FINISH NOTES"
▨	GYP BOARD CEILING	SEE "FINISH NOTES"
▭	1'-3" x 4' FIXTURE	CEILING MOUNTED
—	VANITY LIGHT	WALL MOUNTED
◎	6" RECESSED	
⊗	EXIT SIGN	WALL MOUNTED
⊔	EMERGENCY LIGHT	WALL MOUNTED
◩	RETURN AIR GRILLE	
⊠	SUPPLY AIR DIFFUSER	
M	EXHAUST FAN	

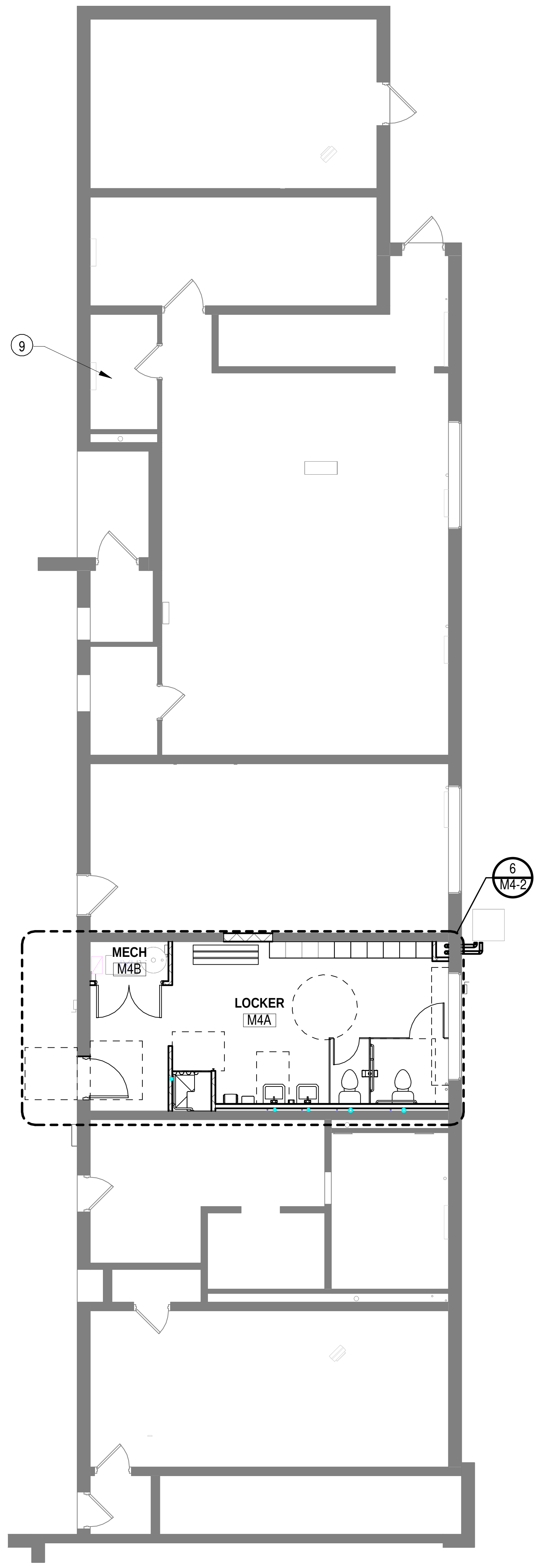
9
6
M4-2
MECH
M4B
LOCKER
M4A

1 M4-2 ENLARGED M-4 FLOOR PLAN

1/8" = 1'-0"

N

FLOOR PLAN GENERAL NOTES

1. COORDINATE SIZE AND LOCATION OF ALL CONCRETE HOUSEKEEPING PADS AND/OR EQUIPMENT SUPPORTS WITH APPROPRIATE EQUIPMENT MANUFACTURER.
2. COORDINATE SIZE & LOCATION OF ALL ACCESS PANELS WITH TRADE REQUIRING THE SAME. ACCESS PANELS ARE SPECIFIED ARCHITECTURALLY BUT ARE REQUIRED TO BE PROVIDED BY EACH TRADE. ALL LOCATIONS MUST BE COORDINATED & APPROVED BY THE ARCHITECTS FIELD REPRESENTATIVE.
3. CONTRACTORS SHALL VERIFY ALL EXISTING BUILDING DIMENSIONS, PARTITION & WALL LOCATIONS, & FLOOR ELEVATIONS IN THE FIELD & NOTIFY THE ARCHITECTS REPRESENTATIVE OF ANY DISCREPANCIES BEFORE START OF WORK.
4. FLOOR PLANS ARE DIMENSIONED TO FACE OF MASONRY OR STUD FRAMING, U.N.O.
5. DIMENSIONS FOLLOWED BY ± SHOULD BE REVIEWED & ALL NECESSARY ADJUSTMENTS MADE PRIOR TO FABRICATION AND/OR INSTALLATION OF AFFECTED WORK. NOTIFY ARCHITECTS REPRESENTATIVE IF DISCREPANCIES ARISE BEFORE PROCEEDING WITH THE WORK.
6. PROVIDE INTERIOR CMU & GYPSUM BOARD CONTROL JOINTS AT BOTH JAMBS OF DOORS, WINDOWS, & OPENINGS. PROVIDE AT HEAD & SILL OF WINDOWS & PASS THRU OPENINGS.
7. VERIFY QUANTITY, SIZE, & LOCATION OF ALL FLOOR, ROOF, & WALL OPENINGS FOR MECHANICAL & ELECTRICAL WORK WITH THE APPROPRIATE TRADE. PROVIDE ALL OPENINGS SHOWN OR REQUIRED FOR THE COMPLETION OF THE WORK. PROVIDE ALL LINTELS REQUIRED FOR THESE OPENINGS PER SPECIFICATIONS.
8. PROVIDE WOOD BLOCKING WITHIN STUD WALLS FOR WALL MOUNTED ITEMS i.e. GRAB BARS, TOWEL DISPENSERS, WALL STOPS, TOILET PARTITION JAMBS, ETC.
9. PROVIDE NEW BULLNOSE CMU AT JAMBS OF ALL NEW MASONRY OPENINGS.
10. PORTABLE FIRE EXTINGUISHERS SHALL BE SELECTED, INSTALLED & MAINTAINED IN ACCORDANCE WITH SECTION 906 OF THE INTERNATIONAL FIRE CODE & NFPA 10.

FINISH NOTES

1. PRIME AND PAINT ALL INTERIOR WALLS, FLOOR TO CEILING.
   NEW BLOCK SW HD Block Filler, Macropoxy 646 2 topcoats of our Acrolon 218 HS Polyurethane
   EXISTING BLOCK Macropoxy 646 2 topcoats of our Acrolon 218 HS Polyurethane
2. PATCH AND COAT ALL FLOORS WITH NON-SLIP COATING.
   PATCH SW Armorseal Express Patch
   PRIMER SW GP3504
   TOP COAT SW GP4850
3. ACOUSTICAL CEILING TILE GRID SYSTEM: ARMSTRONG CEILINGS, SUPRAFINE XL HIGH RECYCLED CONTENT, COLOR (WHITE), 9/16" EXPOSED TEE, HOT-DIPPED GALVANIZED STEEL, SEISMIC CATEGORY (DEF), HEAVY DUTY. MAIN BEAM: 7501HRC 12FT HD MAIN BEAM, 144" X 9/16" X 1-11/16". CROSS TEE: XL7520HRC 2FT CROSS TEE HRC, 24" X 9/16" X 1-11/16"
4. ACOUSTICAL CEILING TILES: ARMSTRONG CEILINGS, KITCHEN ZONE, COLOR (WHITE), 24" X 24", THICKNESS (5/8"), EDGE (SQUARE LAY-IN 15/16"), MATERIAL (MINERAL FIBER), CAC (33), FIRE PERFORMANCE (CLASS A (UL)), LIGHT REFLECTANCE (89%), MOLD/MILDEW RESISTANCE (BIOBLOCK), SAG/ HUMIDITY RESISTANCE (HUMIGUARD PLUS)

REFLECTED CEILING PLAN NOTES

1. REFER TO ELECTRICAL DRAWINGS FOR FIXTURE TYPES. REFER TO ELECTRICAL AND MECHANICAL DRAWINGS FOR ADDITIONAL INFORMATION PERTAINING TO ELECTRICAL AND MECHANICAL WORK.
2. COORDINATE SIZE AND LOCATION OF ALL ACCESS PANELS WITH TRADE REQUIRING THE SAME. ACCESS PANELS ARE SPECIFIED ARCHITECTURALLY BUT ARE REQUIRED TO BE PROVIDED BY TRADE. SPOT ALL LOCATIONS WITHIN FIXED GYPSUM BOARD CEILINGS AND RECEIVE APPROVAL FROM THE ARCHITECT'S FIELD REPRESENTATIVE BEFORE PLACEMENT.
3. COORDINATE CEILING SUSPENSION SYSTEMS WITH OTHER CEILING SPACE EQUIPMENT SUPPORTS.
4. ALL GYPSUM BOARD FASCIAS @ SOFFITS, ADJACENT TO LAY-IN CEILINGS, SHALL EXTEND 4"MINIMUM ABOVE LAY-IN CEILINGS, U.N.O.
5. PROVIDE WOOD BLOCKING, ABOVE GYPSUM BOARD CEILINGS, AS REQUIRED FOR MISCELLANEOUS SUSPENDED ITEMS (e.g. CURTAIN TRACKS, WINDOW SHADES, ACOUSTICAL BAFFLES, ETC.)

PLAN KEYNOTES

1. NEW 4" W x 8" H x 16" L CMU WALL
2. INFILL DOOR OPENING WITH CMU. MATCH EXISTING WALL.
3. NEW DOOR & CMU IN-FILL
4. NEW LOCKERS: SCHOOLLOCKERS.COM, SKU (61151572QS1), COLOR (GRAY), 15" WIDE X 15" DEEP X 78" HIGH (INCLUDING 6" LEGS)
5. BENCH: GLOBAL INDUSTRIAL™, LOCKER ROOM BENCH, MODEL # (W493705) HARDWOOD W/ TRAPEZOID LEGS, COLOR (NATURAL), MOUNTING STYLE (BOLT DOWN), 60" WIDE X 9-1/2" DEEP X 17" HIGH
6. 3-5/8" MTL STUD WALL WITH 5/8" GREEN BOARD AND FRP PANEL
7. BRACE TOILET PARTITION AS NEEDED.
8. OUTLINE OF WINDOW BULKHEAD ABOVE.
9. NEW CEILING, FLOOR AND BASE. PAINT WALLS

REV	DESCRIPTION	BY	DATE

EDWARD J. KOWALCZYK
No. AR11700117
Edward J. Kowalczyk
1-23-25

SCO ENGINEERING, LLC
SOLUTIONS PROVIDED • PROBLEMS SOLVED
FORT WAYNE
6534 Constitution Drive
Fort Wayne, IN 46804
(260) 436-9213
(260) 432-5481 fax
scofw@sco-llc.com

JONES
PETRIE
RAFINSKI
Fort Wayne, IN
p: 260.422.2522

JPR
South Bend, IN
p: 574.232.4388

TOLL ROAD MAINTENANCE BARN

M-2: 4504 N. FAIL RD LA PORTE, IN 46350
M-4: 7200 N. 600 W SHIPSHEWANA, IN 46565
M-5: 7565 N. 650 W ORLAND, IN 46776

ITRCC
3200 CASSOPOLIS STREET
ELKHART, IN 46514

FLOOR PLAN, REFLECTED CEILING PLAN, ENLARGED PLANS, AND WALL SECTION

DESIGNED BY: EJK
REVIEWED BY: KNB
DRAWN BY: AND
DATE: 1/23/2025
JOB NUMBER: 2024-01323
SCALE: As indicated

M4-2

1/23/2025 5:46:23 AM

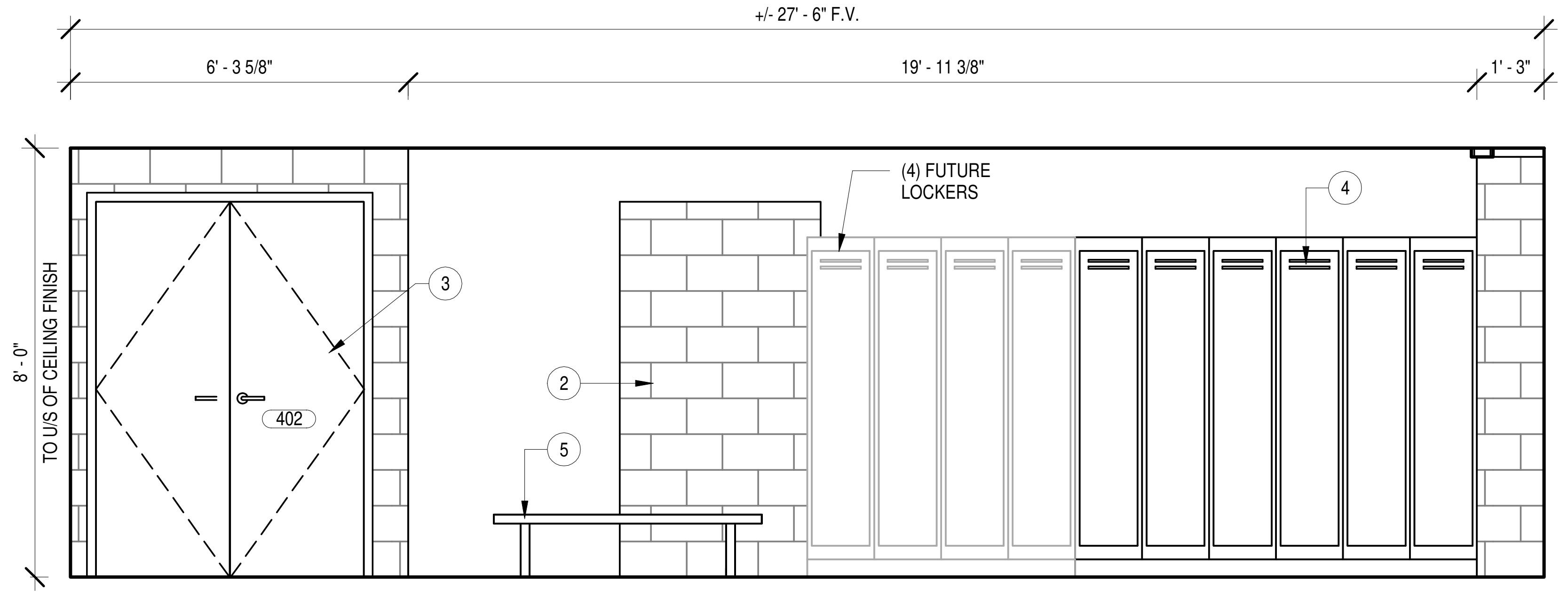
+/- 27' - 6" F.V.
6' - 3 5/8"
19' - 11 3/8"
1' - 3"
8' - 0"
TO U/S OF CEILING FINISH
(4) FUTURE
LOCKERS
3
4
2
5
402

1 M4-3 M-4 RESTROOM - SOUTH ELEV.

3/8" = 1'-0"

NOTE: REFER TO SHEET M4-2/PLAN KEYNOTES

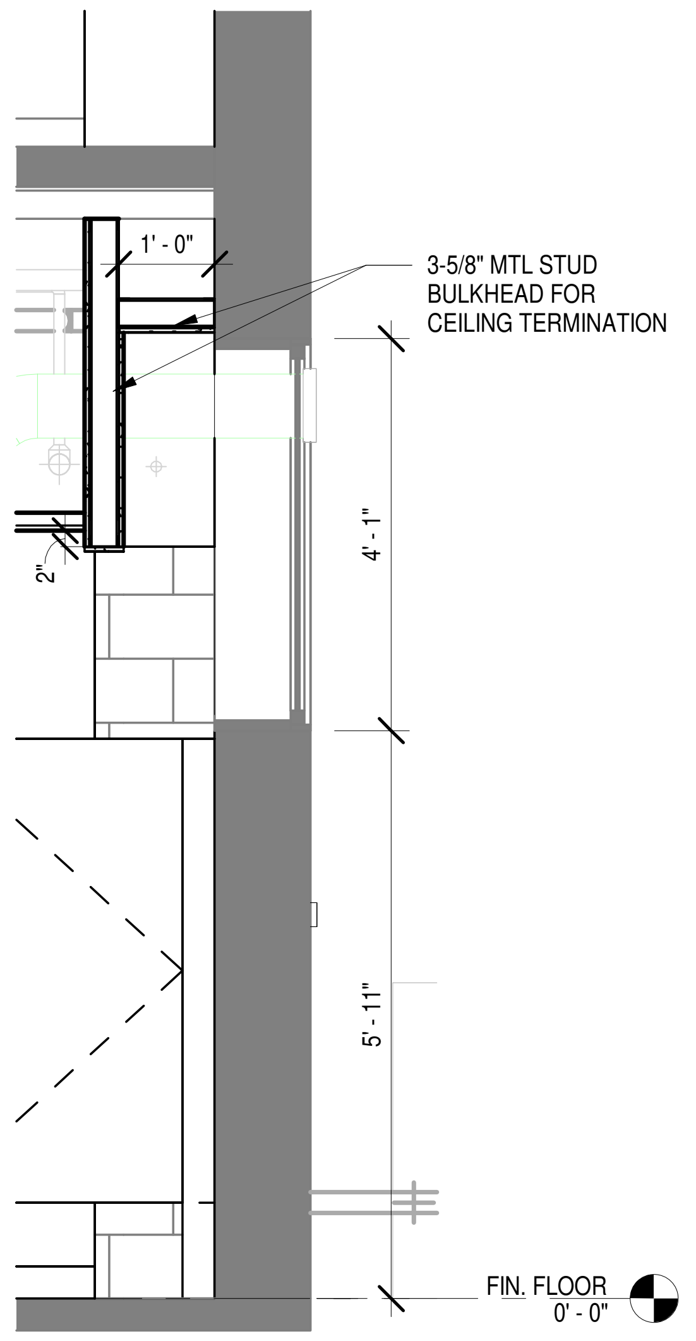
1' - 0"
3-5/8" MTL STUD
BULKHEAD FOR
CEILING TERMINATION
2"
4' - 1"
5' - 11"
FIN. FLOOR
0' - 0"

2 M4-3 M-4 SECTION @ WINDOW

1/2" = 1'-0"

REV	DESCRIPTION	BY	DATE

EDWARD J. KOWALCZYK
No. AR11700117

Edward J. Kowalczyk
1-23-25

SCO ENGINEERING, LLC
SOLUTIONS PROVIDED • PROBLEMS SOLVED
FORT WAYNE
6534 Constitution Drive
Fort Wayne, IN 46804
(260) 436-9213
(260) 432-5481 fax
scofw@sco-llc.com

JONES
PETRIE
RAFINSKI
Fort Wayne, IN
p: 260.422.2522
South Bend, IN
p: 574.232.4388

TOLL ROAD MAINTENANCE BARN

M-2: 4504 N. FAIL RD LA PORTE, IN 46350
M-4: 7200 N. 600 W SHIPSHEWANA, IN 46565
M-5: 7565 N. 650 W ORLAND, IN 46776

ITRCC
3200 CASSOPOLIS STREET ELKHART, IN 46514

ELEVATIONS

DESIGNED BY: EJK
REVIEWED BY: KNB
DRAWN BY: AND
DATE: 1/23/2025
JOB NUMBER: 2024-01323
SCALE: As indicated

M4-3

1/23/2025 5:13:08 AM

CODE NOTES:

S-1/B OCCUPANCY

14,800 SQ FT.

#	DEMOLITION KEYNOTES
1.	REMOVE HOLLOW METAL DOOR & FRAME.
2.	REMOVE J-BOX.
3.	REMOVE EXIT LIGHT.
4.	REMOVE PANELBOARD.
5.	REMOVE PORTION OF WALL TO CREATE OPENING FOR NEW HOLLOW METAL DOOR.
6.	REMOVE DISCONNECT.
7.	REMOVE DOOR SLAB ONLY. FRAME AND OPENING TO REMAIN.
8.	REMOVE ACT CEILING.
9.	REMOVE LIGHT FIXTURES.
10.	REFER TO MECHANICAL SHEETS FOR EQUIPMENT REMOVAL.

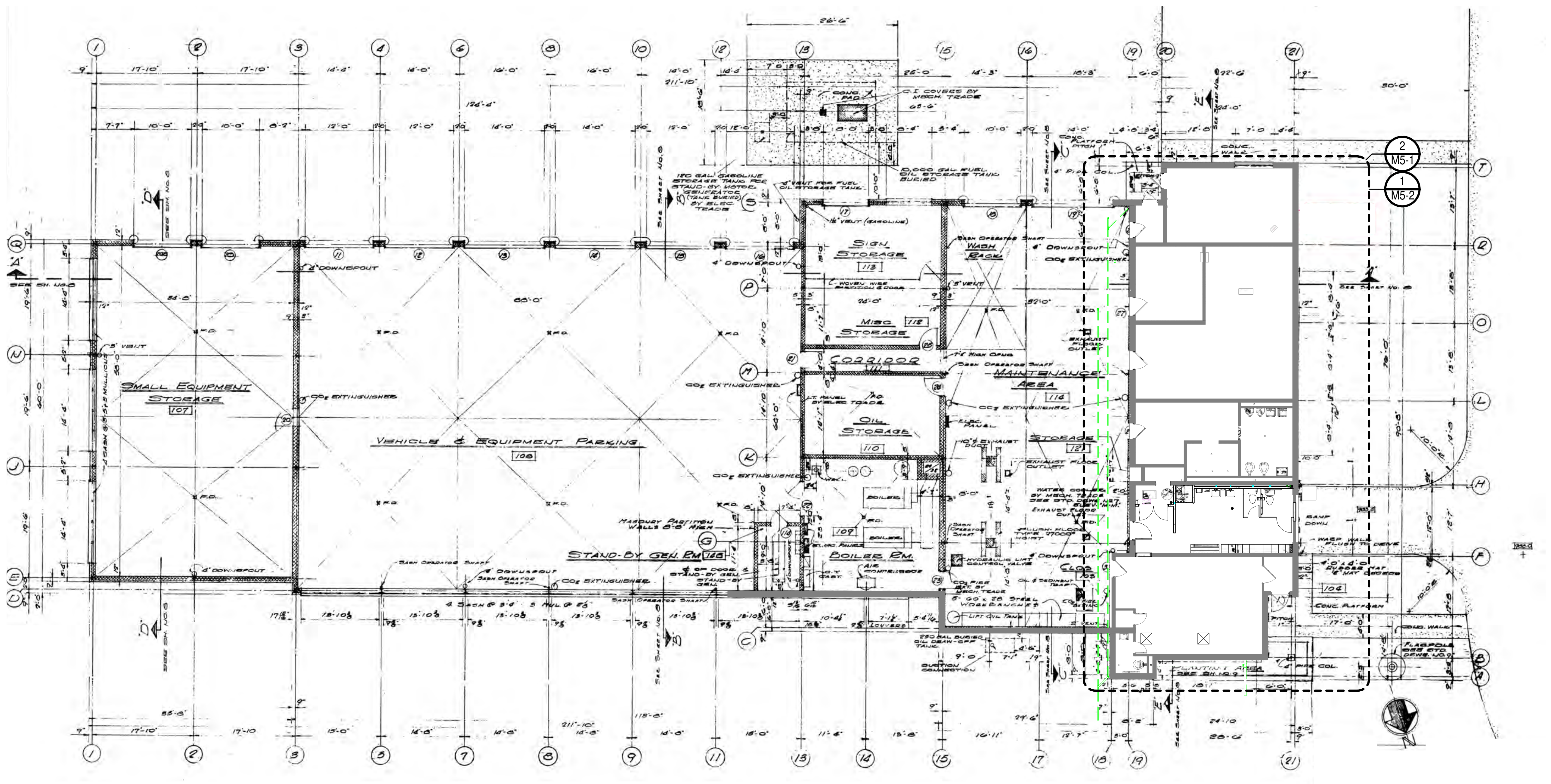
SMALL EQUIPMENT STORAGE
VEHICLE & EQUIPMENT PARKING
SIGN STORAGE
MISC STORAGE
CORRIDOR
OIL STORAGE
WASH BAY
MAINTENANCE AREA
STORAGE
BOILER RM
STAND-BY GEN RM
2
M5-1
M5-2

1 M5-1 **M-5 OVERALL FLOOR PLAN**
1/16" = 1'-0"

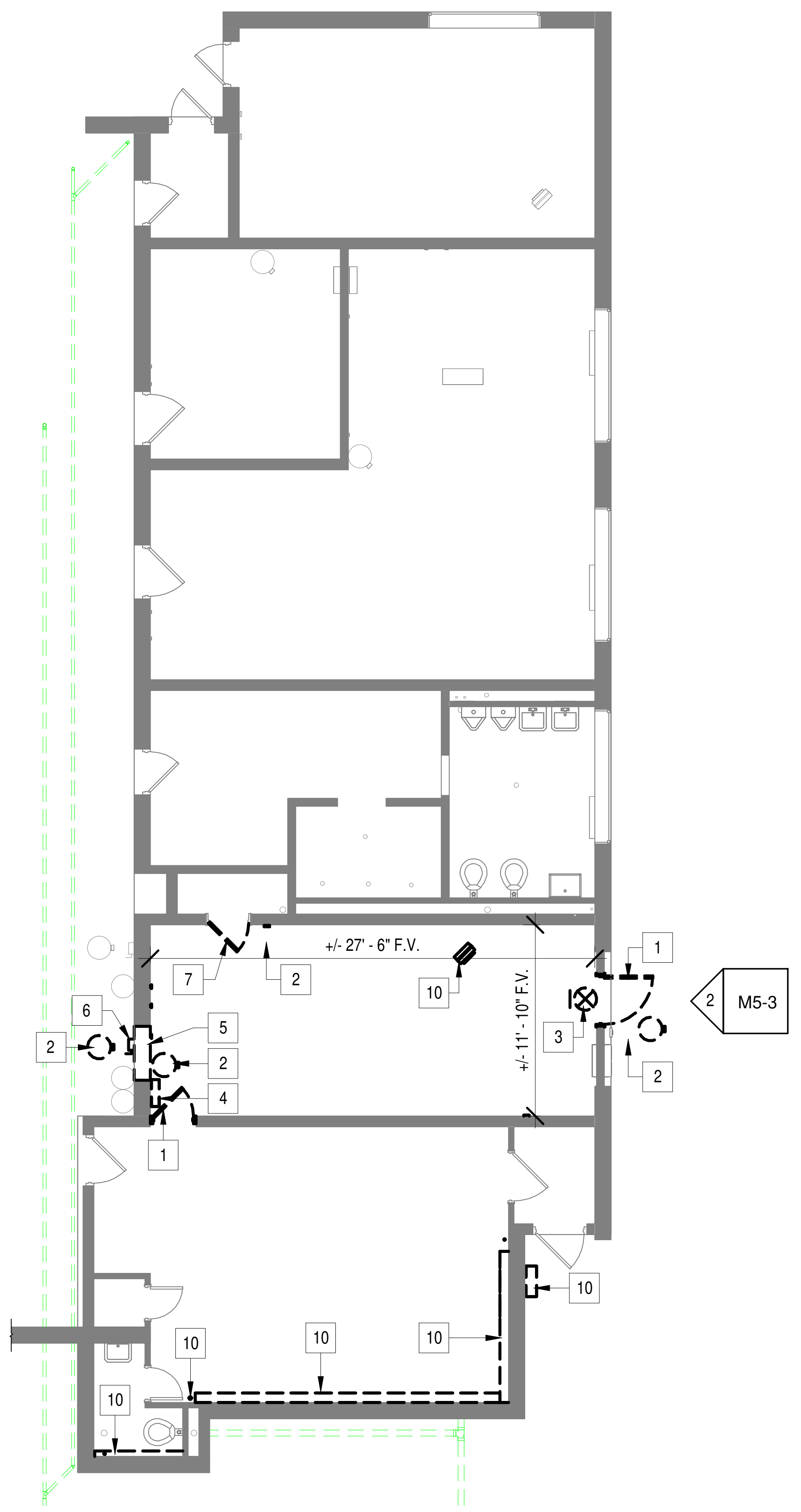
+/- 27' - 6" F.V.
+/- 11' - 10" F.V.
1
2
3
4
5
6
7
10
2
M5-3

2 M5-1 **ENLARGED M-5 DEMOLITION PLAN**
1/8" = 1'-0"

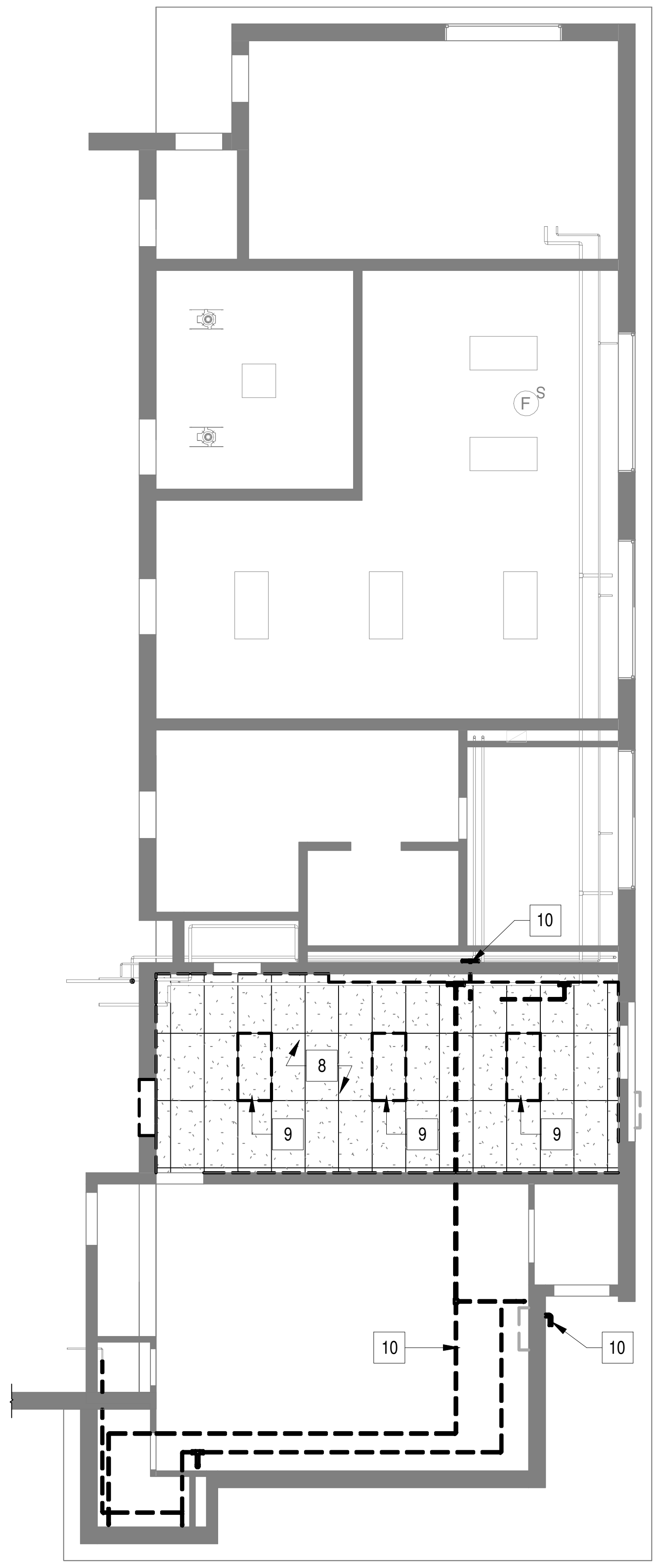

3 M5-1 **M-5 DEMOLITION RCP**
1/8" = 1'-0"

1/23/2025 5:13:17 AM

REV	DESCRIPTION	BY	DATE

EDWARD J. KOWALCZYK
REGISTERED
No. AR11700117
STATE OF INDIANA
ARCHITECT
Edward J. Kowalczyk
1-23-25

SCO ENGINEERING, LLC
SOLUTIONS PROVIDED • PROBLEMS SOLVED
FORT WAYNE
6534 Constitution Drive
Fort Wayne, IN 46804
(260) 436-9213
(260) 432-5481 fax
scofw@sco-llc.com

JONES PETRIE RAFINSKI
South Bend, IN
p: 574.232.4388
Fort Wayne, IN
p: 260.422.2522

TOLL ROAD MAINTENANCE BARN
M-2: 4504 N. FAIL RD LA PORTE, IN 46350
M-4: 7200 N. 600 W SHIPSHEWANA, IN 46565
M-5: 7565 N. 650 W ORLAND, IN 46776

ITRCC
3200 CASSOPOLIS STREET ELKHART, IN 46514

OVERALL FLOOR PLAN & DEMOLITION PLANS

DESIGNED BY: EJK
REVIEWED BY: KNB
DRAWN BY: AND
DATE: 1/23/2025
JOB NUMBER: 2024-01323
SCALE: As indicated

M5-1

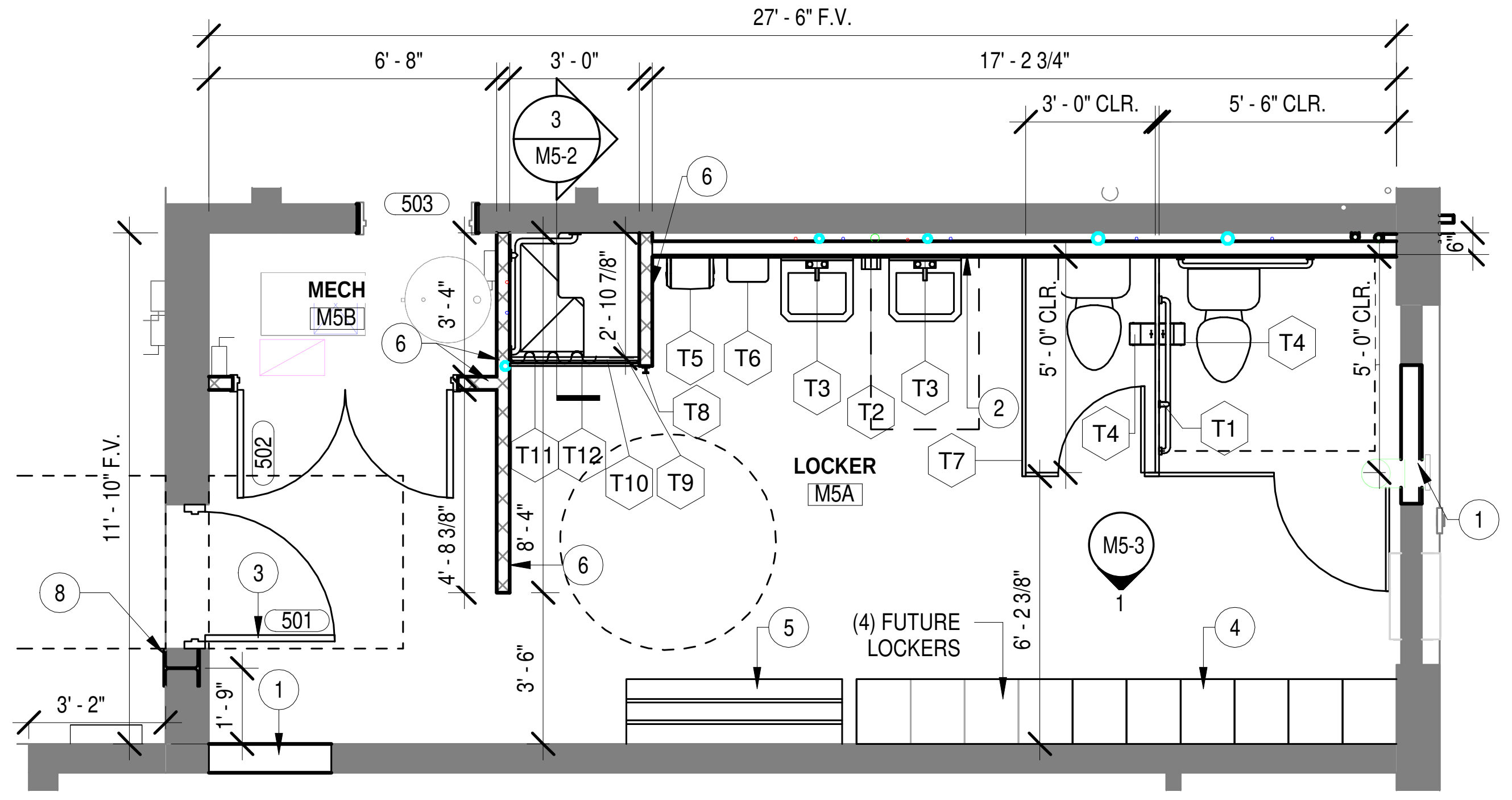

6
M5-2
M-5 RESTROOM PLAN
1/4" = 1'-0"

T# TOILET ACCESSORIES			
TAG	MANUF	MODEL	REMARKS
T1	BOBRICK	#6806	GRAB BAR
T2	TBD	TBD	WALL MOUNTED SOAP DISPENSER
T3	BOBRICK	B-165-1836	MIRROR
T4	BOBRICK	B-288	SURFACE MOUNT TOILET PAPER HOLDER:
T5		PAPER TOWEL DISPENSER	
T6		WARM AIR DRYER (XLERATOR HAND DRYER XL- BW WHITE THERMOSET	
T7	TBD	TBD	TOILET PARTITION
T8	BOBRICK	B-76717	SURFACE-MOUNTED SINGLE ROBE HOOK, SATIN FINISH: 18-8, TYPE-304, 22-GAUGE (0.8MM) STAINLESS STEEL. CONCEALED, 18-GAUGE (1.2MM) STAINLESS STEEL MOUNTING BRACKET. ALL-WELDED CONSTRUCTION. SECURED TO WALL PLATE W/ A STAINLESS STEEL SETSCREW. FLANGE IS 2″ X 2″ (50 X 50MM). HOOK IS 1-5/8″ HIGH, 13/16″ WIDE (40 X 20MM). PROJECTS 1 5/8″ (40MM) FROM WALL.
T9	BOBRICK	B-5181	ADA SHOWER SEAT: ONE-PIECE, 1/2" (13MM) THICK, COMPACT-GRADE LAMINATE W/ MATTE-FINISH, IVORY-COLORED, MELAMINE SURFACES & BLACK PHENOLIC-RESIN CORE — CANNOT DELAMINATE. INTEGRAL SLOTS FOR WATER DRAINAGE. 18-8, TYPE-304 STAINLESS STEEL W/ SATIN FINISH, 16-GAUGE (1.6MM), 1-1/4" (30MM) SQUARE TUBING & 18-GAUGE (1.2MM), 1" (25MM) DIA. SEAMLESS TUBING.SH, 16-GAUGE (1.6MM), 1-1/4" (30MM) SQUARE TUBING & 18-GAUGE (1.2MM), 1" (25MM) DIA. SEAMLESS TUBING.
T10	BOBRICK	B-207-26	CURTAIN ROD: HEAVY DUTY SHOWER CURTAIN ROD W/ CONCEALED MOUNTING, 18-8, TYPE-304, 20-GUAGE (1.0MM) STAINLESS STEEL TUBING W/ SATIN FINISH, 1" (25MM) OUTSIDE DIA.
T11	TBD	TBD	RUBBER SEAL FOR FLOOR
T12	BOBRICK	B-204-2	CURTAIN: VINYL SHOWER CURTAINS, COLOR (OPAQUE MATTE WHITE), .008" (0.2MM) THICK, WHITE HDPE GROMMETS ALONG TOP (ONE EVERY 6" (150MM)), HEMMED BOT. & SIDES, 7 HOOKS REQUIRED (NOT INCLUDED), 42" WIDE X 72" HIGH. USE BRADLEY HANGERS, MODEL 9540, STAINLESS STEEL SPRING WIRE W/ SNAP FASTENER. ROLLERS ARE BRASS W/ NICKEL PLATING. FIVE ROLLERS PER HOOK. CAN BE USED W/ 1" & 1-1/4" DIA. CURTAIN RODS.
T13	BOBRICK	B-6861	ADA SHOWER GRAB BAR

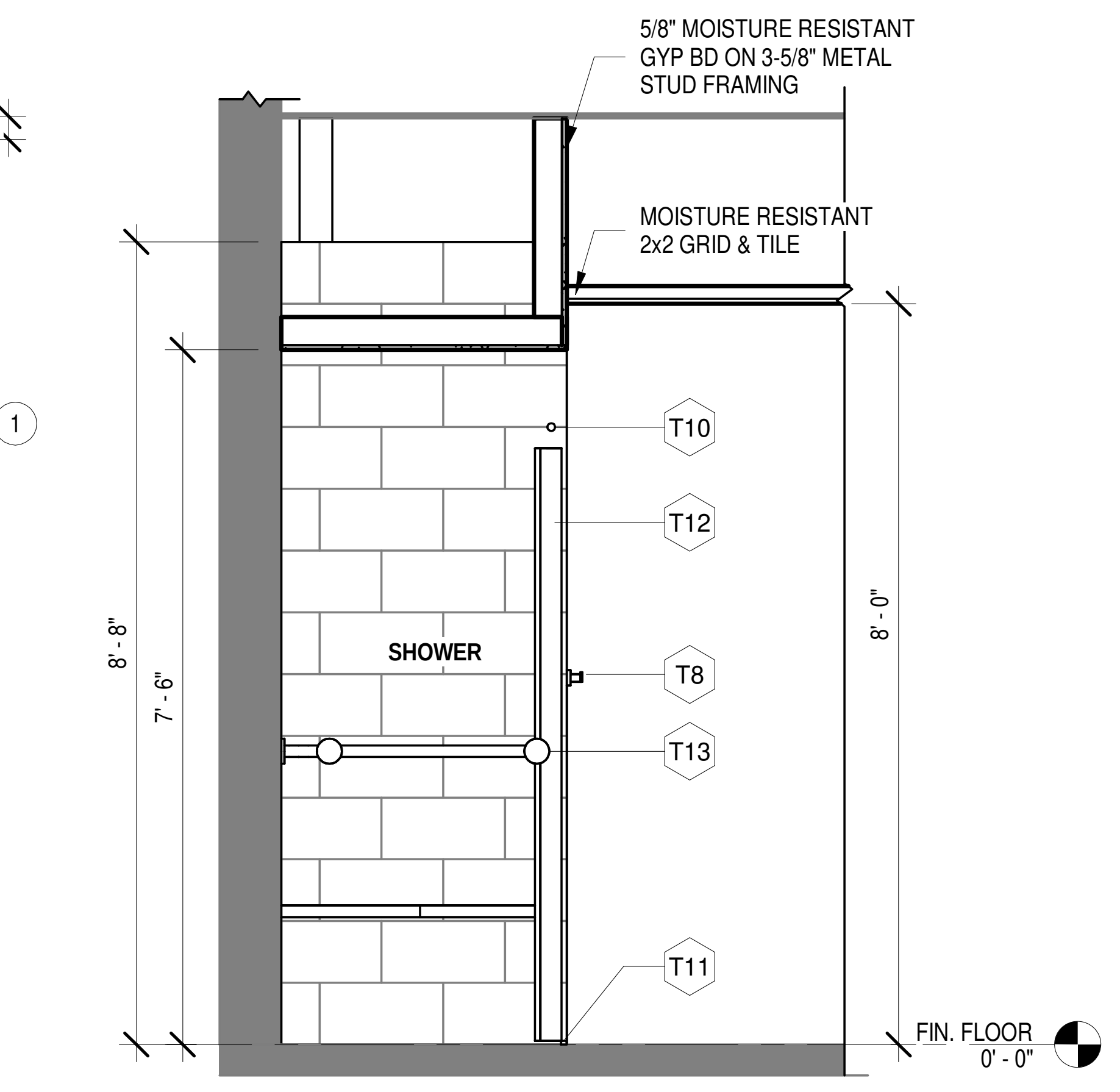
5/8" MOISTURE RESISTANT GYP BD ON 3-5/8" METAL STUD FRAMING
MOISTURE RESISTANT 2x2 GRID & TILE
T10
T12
SHOWER
T8
T13
T11
8' - 8"
7' - 6"
8' - 0"
FIN. FLOOR 0' - 0"

3
M5-2
M-5 SECTION @ SHOWER
1/2" = 1'-0"

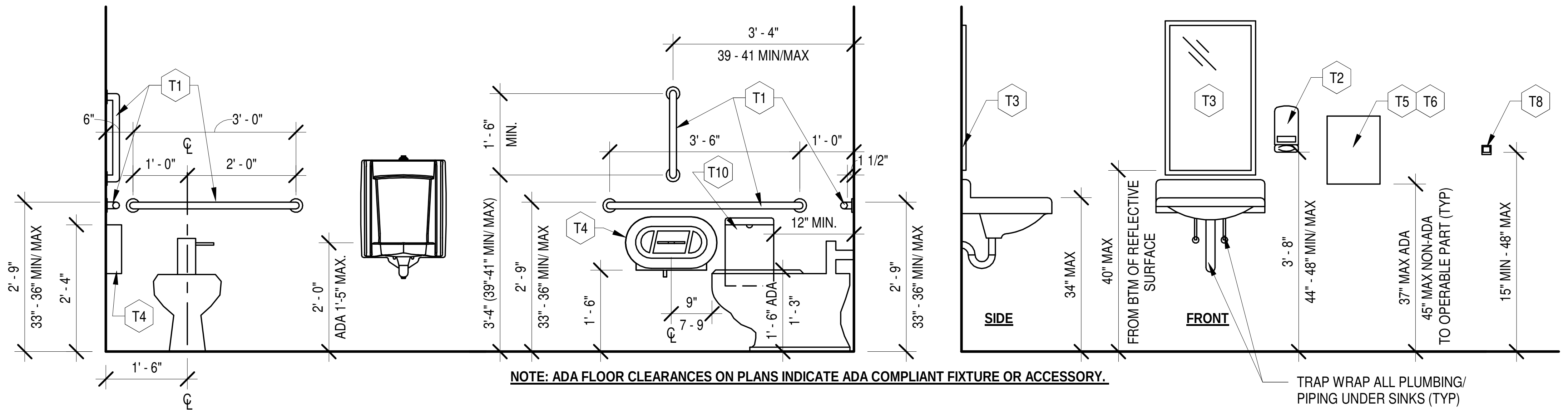

NOTE: ADA FLOOR CLEARANCES ON PLANS INDICATE ADA COMPLIANT FIXTURE OR ACCESSORY.

4
M5-2
TOILET MOUNTING HEIGHTS (M-5)
1/2" = 1'-0"

M-5 DOOR SCHEDULE															
	DOOR						FRAME								
MARK	WIDTH	HEIGHT	THICKNESS	MATERIAL	DR FIN	ELEV TYPE	MATERIAL	FR FIN	ELEV TYPE	HEAD	JAMB	SILL	HARDWARE SET	Fire Rating	COMMENTS
501	3' - 0"	7' - 0"	0' - 1 3/4"												
502	5' - 0"	7' - 0"	0' - 1 3/4"												

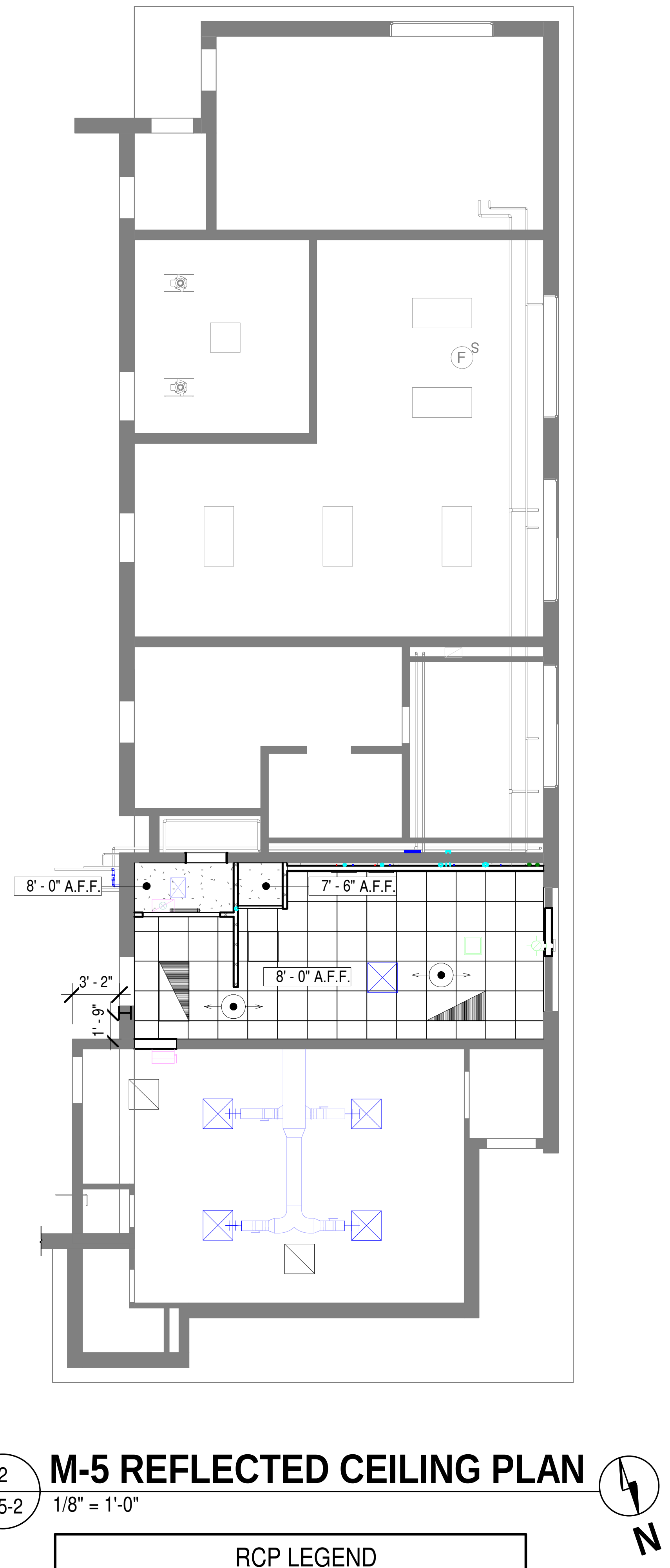

2
M5-2
M-5 REFLECTED CEILING PLAN
1/8" = 1'-0"

RCP LEGEND		
SYMBOL	DESCRIPTION	REMARKS
▦	A.C.T AND GRID	SEE "FINISH NOTES"
▨	GYP BOARD CEILING	SEE "FINISH NOTES"
▭	1'-3" x 4' FIXTURE	CEILING MOUNTED
▬	VANITY LIGHT	WALL MOUNTED
◎	6" RECESSED	
⊗	EXIT SIGN	WALL MOUNTED
⊔	EMERGENCY LIGHT	WALL MOUNTED
⧄	RETURN AIR GRILLE	
⊠	SUPPLY AIR DIFFUSER	
Ⓜ	EXHAUST FAN	

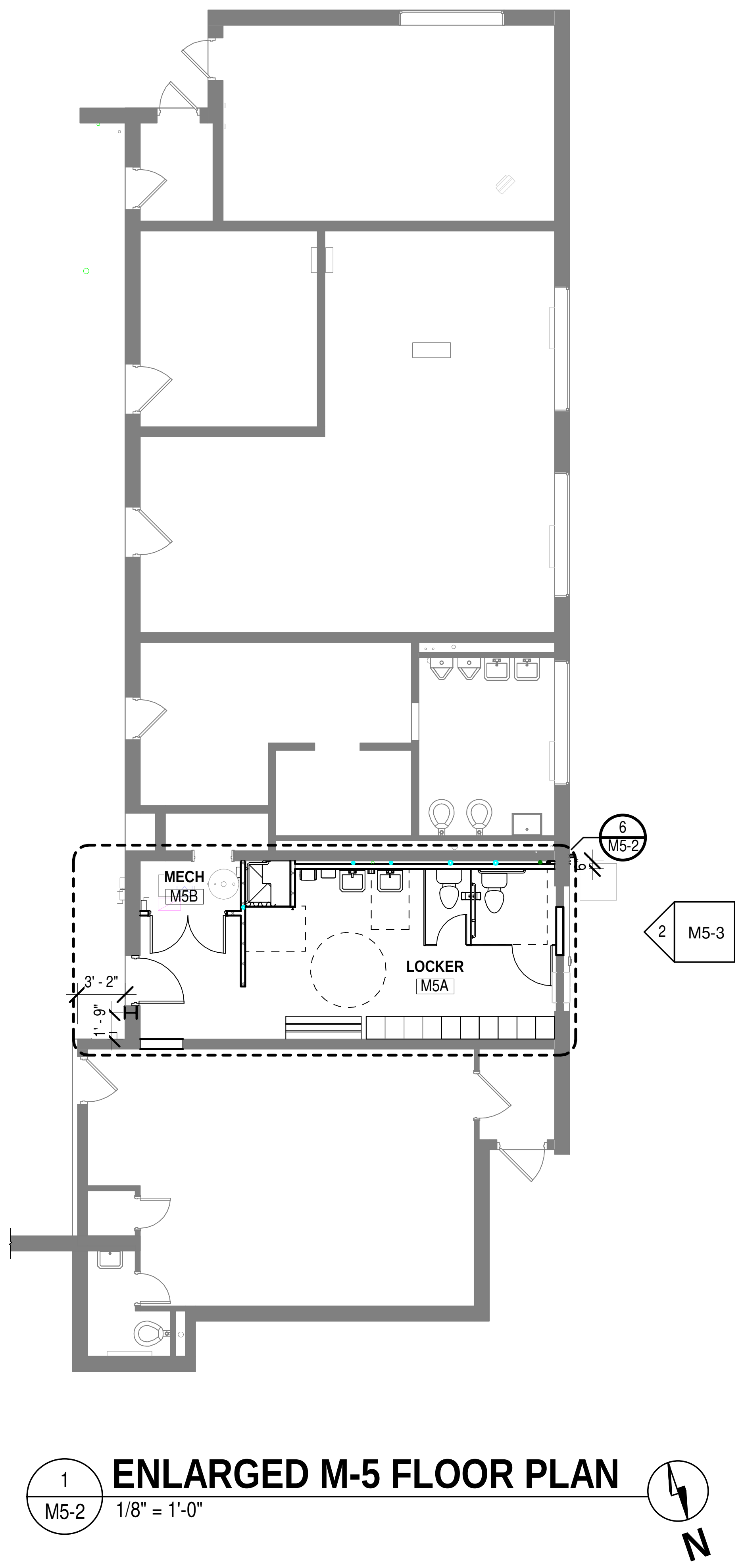

1
M5-2
ENLARGED M-5 FLOOR PLAN
1/8" = 1'-0"

FLOOR PLAN GENERAL NOTES

1. COORDINATE SIZE AND LOCATION OF ALL CONCRETE HOUSEKEEPING PADS AND/OR EQUIPMENT SUPPORTS WITH APPROPRIATE EQUIPMENT MANUFACTURER.
2. COORDINATE SIZE & LOCATION OF ALL ACCESS PANELS WITH TRADE REQUIRING THE SAME. ACCESS PANELS ARE SPECIFIED ARCHITECTURALLY BUT ARE REQUIRED TO BE PROVIDED BY EACH TRADE. ALL LOCATIONS MUST BE COORDINATED & APPROVED BY THE ARCHITECTS FIELD REPRESENTATIVE.
3. CONTRACTORS SHALL VERIFY ALL EXISTING BUILDING DIMENSIONS, PARTITION & WALL LOCATIONS, & FLOOR ELEVATIONS IN THE FIELD & NOTIFY THE ARCHITECTS REPRESENTATIVE OF ANY DISCREPANCIES BEFORE START OF WORK.
4. FLOOR PLANS ARE DIMENSIONED TO FACE OF MASONRY OR STUD FRAMING, U.N.O.
5. DIMENSIONS FOLLOWED BY ± SHOULD BE REVIEWED & ALL NECESSARY ADJUSTMENTS MADE PRIOR TO FABRICATION AND/OR INSTALLATION OF AFFECTED WORK. NOTIFY ARCHITECTS REPRESENTATIVE IF DISCREPANCIES ARISE BEFORE PROCEEDING WITH THE WORK.
6. PROVIDE INTERIOR CMU & GYPSUM BOARD CONTROL JOINTS AT BOTH JAMBS OF DOORS, WINDOWS, & OPENINGS. PROVIDE AT HEAD & SILL OF WINDOWS & PASS THRU OPENINGS.
7. VERIFY QUANTITY, SIZE, & LOCATION OF ALL FLOOR, ROOF, & WALL OPENINGS FOR MECHANICAL & ELECTRICAL WORK WITH THE APPROPRIATE TRADE. PROVIDE ALL OPENINGS SHOWN OR REQUIRED FOR THE COMPLETION OF THE WORK. PROVIDE ALL LINTELS REQUIRED FOR THESE OPENINGS PER SPECIFICATIONS.
8. PROVIDE WOOD BLOCKING WITHIN STUD WALLS FOR WALL MOUNTED ITEMS i.e. GRAB BARS, TOWEL DISPENSERS, WALL STOPS, TOILET PARTITION JAMBS, ETC.
9. PROVIDE NEW BULLNOSE CMU AT JAMBS OF ALL NEW MASONRY OPENINGS.
10. PORTABLE FIRE EXTINGUISHERS SHALL BE SELECTED, INSTALLED & MAINTAINED IN ACCORDANCE WITH SECTION 906 OF THE INTERNATIONAL FIRE CODE & NFPA 10.

FINISH NOTES

1. PRIME AND PAINT ALL INTERIOR WALLS, FLOOR TO CEILING.
   NEW BLOCK SW HD Block Filler, Macropoxy 646 2 topcoats of our Acrolon 218 HS Polyurethane
   EXISTING BLOCK Macropoxy 646 2 topcoats of our Acrolon 218 HS Polyurethane
2. PATCH AND COAT ALL FLOORS WITH NON-SLIP COATING.
   PATCH SW Armorseal Express Patch
   PRIMER SW GP3504
   TOP COAT SW GP4850
3. ACOUSTICAL CEILING TILE GRID SYSTEM: ARMSTRONG CEILINGS, SUPRAFINE XL HIGH RECYCLED CONTENT, COLOR (WHITE), 9/16" EXPOSED TEE, HOT-DIPPED GALVANIZED STEEL, SEISMIC CATEGORY (DEF), HEAVY DUTY. MAIN BEAM: 7501HRC 12FT HD MAIN BEAM, 144" X 9/16" X 1-11/16". CROSS TEE: XL7520HRC 2FT CROSS TEE HRC, 24" X 9/16" X 1-11/16"
4. ACOUSTICAL CEILING TILES: ARMSTRONG CEILINGS, KITCHEN ZONE, COLOR (WHITE), 24" X 24", THICKNESS (5/8"), EDGE (SQUARE LAY-IN 15/16"), MATERIAL (MINERAL FIBER), CAC (33), FIRE PERFORMANCE (CLASS A (UL)), LIGHT REFLECTANCE (89%), MOLD/MILDEW RESISTANCE (BIOBLOCK), SAG/ HUMIDITY RESISTANCE (HUMIGUARD PLUS)

REFLECTED CEILING PLAN NOTES

1. REFER TO ELECTRICAL DRAWINGS FOR FIXTURE TYPES. REFER TO ELECTRICAL AND MECHANICAL DRAWINGS FOR ADDITIONAL INFORMATION PERTAINING TO ELECTRICAL AND MECHANICAL WORK.
2. COORDINATE SIZE AND LOCATION OF ALL ACCESS PANELS WITH TRADE REQUIRING THE SAME. ACCESS PANELS ARE SPECIFIED ARCHITECTURALLY BUT ARE REQUIRED TO BE PROVIDED BY TRADE. SPOT ALL LOCATIONS WITHIN FIXED GYPSUM BOARD CEILINGS AND RECEIVE APPROVAL FROM THE ARCHITECT'S FIELD REPRESENTATIVE BEFORE PLACEMENT.
3. COORDINATE CEILING SUSPENSION SYSTEMS WITH OTHER CEILING SPACE EQUIPMENT SUPPORTS.
4. ALL GYPSUM BOARD FASCIAS @ SOFFITS, ADJACENT TO LAY-IN CEILINGS, SHALL EXTEND 4"MINIMUM ABOVE LAY-IN CEILINGS, U.N.O.
5. PROVIDE WOOD BLOCKING, ABOVE GYPSUM BOARD CEILINGS, AS REQUIRED FOR MISCELLANEOUS SUSPENDED ITEMS (e.g. CURTAIN TRACKS, WINDOW SHADES, ACOUSTICAL BAFFLES, ETC.)

PLAN KEYNOTES

1. INFILL REMAINING SPACE FROM DEMOLISHED DOOR. INFILL TO MATCH EXISTING WALL TYPE.
2. NEW 3-5/8" METAL STUD WALL @ 16" O.C. WITH 5/8" GYP ON ROOM SIDE.
3. NEW DOOR & CMU IN-FILL
4. NEW LOCKERS: SCHOOLLOCKERS.COM, SKU (61151572QS1), COLOR (GRAY), 15" WIDE X 15" DEEP X 78" HIGH (INCLUDING 6" LEGS)
5. BENCH: GLOBAL INDUSTRIAL™, LOCKER ROOM BENCH, MODEL # (W493705) HARDWOOD W/ TRAPEZOID LEGS, COLOR (NATURAL), MOUNTING STYLE (BOLT DOWN), 60" WIDE X 9-1/2" DEEP X 17" HIGH
6. NEW 4" W x 8" H x 16" L CMU WALL
7. NEW SHOWER CURTAIN AND ROD. SEE PRODUCT SPECS.
8. INSTALL DOOR AS TIGHT TO EXISTING COLUMN AS POSSIBLE.

REV	DESCRIPTION	BY	DATE

EDWARD J. KOWALCZYK
No. AR11700117

Edward J. Kowalczyk

SCO ENGINEERING, LLC
SOLUTIONS PROVIDED • PROBLEMS SOLVED
FORT WAYNE
6534 Constitution Drive
Fort Wayne, IN 46804
(260) 436-9213
(260) 432-5481 fax
scofw@sco-llc.com

JONES
PETRIE
RAFINSKI
South Bend, IN
p: 574.232.4388
Fort Wayne, IN
p: 260.422.2522

TOLL ROAD MAINTENANCE BARN
M-2: 4504 N. FAIL RD
M-4: 7200 N. 600 W
M-5: 7565 N. 650 W
LA PORTE, IN 46350
SHIPSHEWANA, IN 46565
ORLAND, IN 46776

ITRCC
3200 CASSOPOLIS STREET
ELKHART, IN 46514

FLOOR PLAN, REFLECTED CEILING PLAN, ENLARGED PLANS, AND WALL SECTION

DESIGNED BY: EJK
REVIEWED BY: KNB
DRAWN BY: AND
DATE: 1/23/2025
JOB NUMBER: 2024-01323
SCALE: As indicated

M5-2

1/23/2025 5:13:18 AM

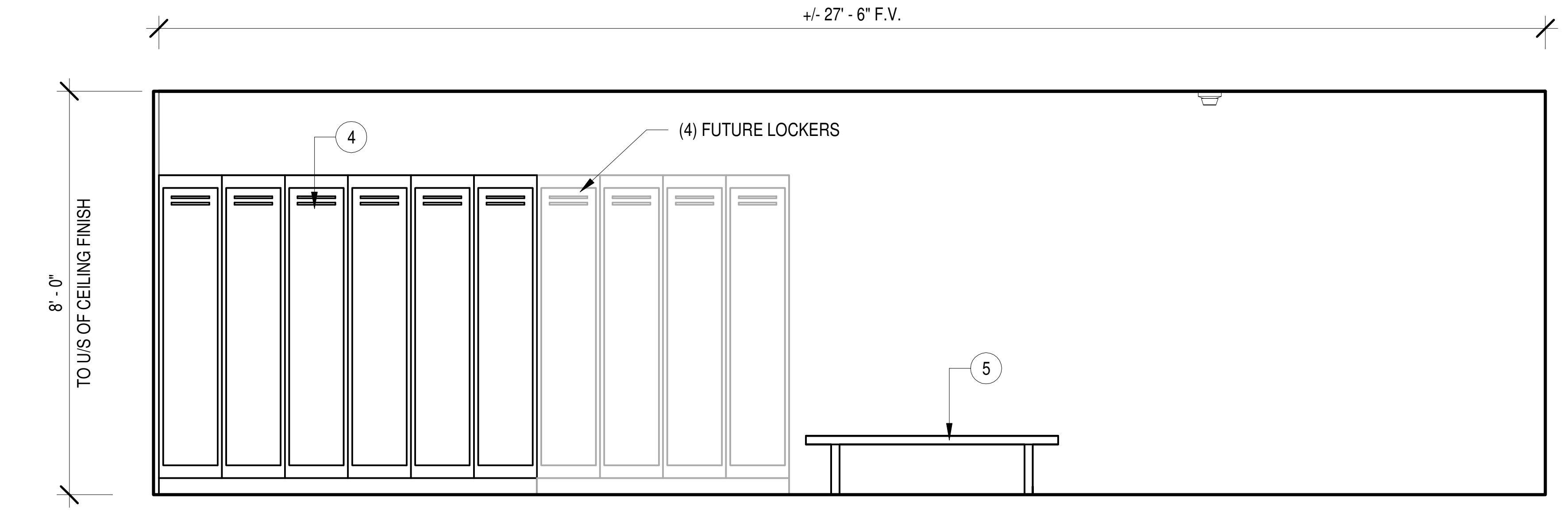
+/- 27' - 6" F.V.
8' - 0"
TO U/S OF CEILING FINISH
4
(4) FUTURE LOCKERS
5

1 M5-3 M-5 RESTROOM - NORTH ELEV.

3/8" = 1'-0"

NOTE: REFER TO SHEET M5-2/PLAN KEYNOTES

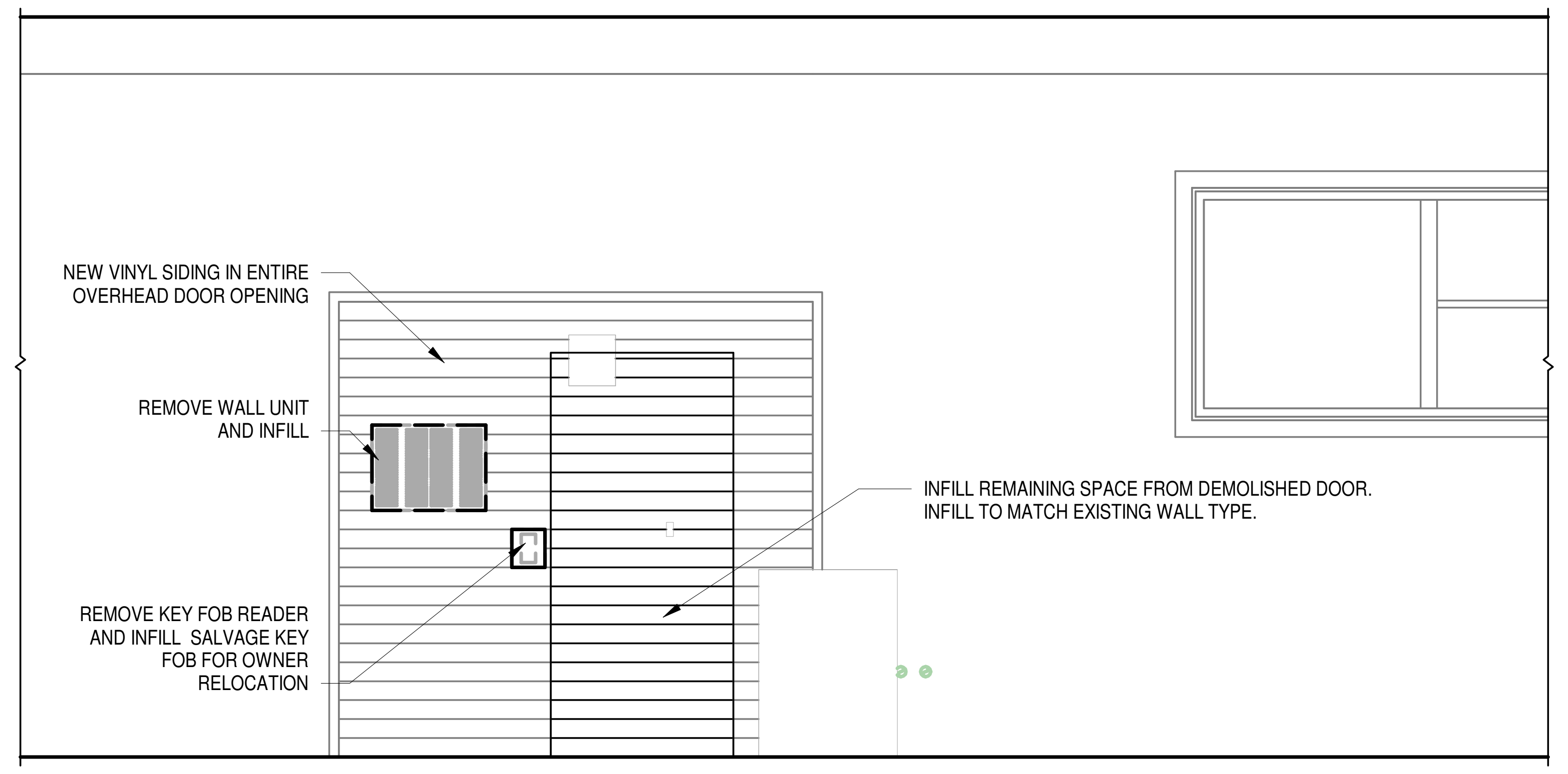
NEW VINYL SIDING IN ENTIRE OVERHEAD DOOR OPENING
REMOVE WALL UNIT AND INFILL
REMOVE KEY FOB READER AND INFILL SALVAGE KEY FOB FOR OWNER RELOCATION
INFILL REMAINING SPACE FROM DEMOLISHED DOOR. INFILL TO MATCH EXISTING WALL TYPE.

2 M5-3 M-5 EAST ELEVATION

3/8" = 1'-0"

REV	DESCRIPTION	BY	DATE

EDWARD J. KOWALCZYK
No. AR11700117

Edward J. Kowalczyk
1-23-25

SCO ENGINEERING, LLC
SOLUTIONS PROVIDED • PROBLEMS SOLVED
FORT WAYNE
6534 Constitution Drive
Fort Wayne, IN 46804
(260) 436-9213
(260) 432-5481 fax
scofw@sco-llc.com

JONES PETRIE RAFINSKI
South Bend, IN
p: 574.232.4388
Fort Wayne, IN
p: 260.422.2522

TOLL ROAD MAINTENANCE BARN
M-2: 4504 N. FAIL RD LA PORTE, IN 46350
M-4: 7200 N. 600 W SHIPSHEWANA, IN 46565
M-5: 7565 N. 650 W ORLAND, IN 46776

ITRCC
3200 CASSOPOLIS STREET ELKHART, IN 46514

ELEVATIONS

DESIGNED BY: EJK
REVIEWED BY: KNB
DRAWN BY: AND
DATE: 1/23/2025
JOB NUMBER: 2024-01323
SCALE: 3/8" = 1'-0"

M5-3

1/23/2025 5:13:18 AM

PLUMBING SPECIFICATIONS

BASIC PLUMBING REQUIREMENTS

PART 1 - GENERAL

1.01 RELATED DOCUMENTS

A. ALL WORK SHALL COMPLY WITH ALL STATE, LOCAL, AND NATIONAL CODES.

B. ALL MATERIALS, EQUIPMENT, AND INSTALLATIONS SHALL MEET OR EXCEED THE REQUIREMENTS OF THE STATE ENERGY CODE (ASHRAE STANDARD 90.1 2007).

C. THE WORK COVERED CONSISTS OF FURNISHING ALL LABOR AND MATERIALS NECESSARY TO INSTALL, COMPLETE, AND MAKE READY FOR CONTINUOUS OPERATION, APPARATUS AND EQUIPMENT FOR THE PLUMBING SYSTEMS AS SHOWN.

D. SCHEDULED EQUIPMENT AND FIXTURES ARE THE BASIS OF DESIGN. CONTRACTOR SHALL PROVIDE AND INSTALL THE SCHEDULED EQUIPMENT OR FIXTURE, OR AN APPROVED EQUAL COMPLIANT TO THE REQUIREMENTS. SHOP DRAWINGS OF ALL SPECIFIED FIXTURES, EQUIPMENT, AND APPARATUS SHALL BE SUBMITTED TO THE ARCHITECT FOR APPROVAL.

E. ALL MATERIAL AND EQUIPMENT SHALL BE NEW. EQUIPMENT, MATERIAL, AND WORKMANSHIP SHALL BE WARRANTED FOR ONE YEAR MINIMUM FROM THE DATE OF SUBSTANTIAL COMPLETION.

F. CONTRACTOR SHALL COORDINATE ALL ASPECTS OF WORK WITH OTHER TRADES PRIOR TO AND DURING CONSTRUCTION AND INSTALLATIONS.

G. WHEN A CONFLICT OCCURS BETWEEN PLANS AND NOTES, THE ENGINEER SHALL DETERMINE WHICH GOVERNS. GENERALLY, THE MOST RESTRICTIVE AND COSTLY ALTERNATIVE SHALL TAKE PRECEDENCE.

H. VERIFY ALL DIMENSIONS FROM ARCHITECTURAL PLANS AND OR STRUCTURAL PLANS.

I. ALL PLUMBING EQUIPMENT SHALL BE LISTED FOR ITS USE AND MOUNTED OR HUNG PER MANUFACTURER'S RECOMMENDATIONS AND LISTING.

J. PROVIDE PIPE AND EQUIPMENT IDENTIFICATION. EQUIPMENT PLASTIC LABELS, MINIMUM 1/16-INCH THICK AND FASTEN WITH RIVETS. PIPE LABELS SHALL BE PRECOILED, SEMI-RIGID PLASTIC FORMED TO COVER FULL CIRCUMFERENCE OF PIPE TO BE ATTACHED TO PIPE WITHOUT FASTENERS OR ADHESIVES. LABEL PIPING EVERY 30-FEET MAXIMUM, DIRECTIONAL CHANGE OR TEE, WHICHEVER IS LEAST.

K. BASIC REQUIREMENTS: REQUIREMENTS OF THE CONTRACT FORMS, CONDITIONS OF THE CONTRACT, SPECIFICATIONS, DRAWINGS, AND ADDENDA AND CONTRACT MODIFICATIONS (THE CONTRACT DOCUMENTS), APPLY TO THE REQUIREMENTS OF EACH SPECIFICATIONS SECTION.

L. THIS CONTRACTOR SHALL OBTAIN AND PAY FOR ALL PERMITS AND INSPECTIONS REQUIRED BY THE AUTHORITIES HAVING JURISDICTION.

M. CONFLICTS: NOTHING CONTAINED IN THIS SECTION SHALL BE CONSTRUED TO CONFLICT IN ANY WAY WITH OTHER PROVISIONS OR REQUIREMENTS OF THE CONTRACT DOCUMENTS. THE INTENT IS THAT THIS SECTION WILL TAKE PRECEDENCE. WHERE DIFFERENCES ARISE, THE ENGINEER SHALL DECIDE WHICH DIRECTIONS OR INSTRUCTIONS TAKE PRECEDENCE.

N. EXACT QUANTITY AND LOCATION SHALL BE DETERMINED BY THE CONTRACTOR AT THE JOB SITE. ALL PLUMBUNG DEMOLITION THAT IS REQUIRED FOR THE INSTALLATION OF THE SHOWN SYSTEMS SHALL BE BY THIS CONTRACTOR.

1.02 SUMMARY

A. GENERAL: UNLESS AN ITEM IS SPECIFICALLY MENTIONED AS BEING PROVIDED BY OTHERS, THE REQUIREMENTS OF DIVISION 22 CONTRACT DOCUMENTS SHALL BE COMPLETED. THE SYSTEMS, EQUIPMENT, DEVICES AND ACCESSORIES SHALL BE INSTALLED, FINISHED, TESTED AND ADJUSTED FOR CONTINUOUS AND PROPER OPERATION. ANY APPARATUS, MATERIAL OR DEVICE NOT SHOWN ON THE DRAWINGS BUT MENTIONED IN THESE SPECIFICATIONS, OR VICE VERSA, OR ANY INCIDENTAL ACCESSORIES NECESSARY TO MAKE THE PROJECT COMPLETE AND OPERATIONAL IN ALL RESPECTS, SHALL BE FURNISHED, DELIVERED AND INSTALLED WITHOUT ADDITIONAL EXPENSE TO THE OWNER. INCLUDE ALL MATERIALS, EQUIPMENT, SUPERVISION, OPERATION, METHODS AND LABOR FOR THE FABRICATION, INSTALLATION, START-UP AND TESTS NECESSARY FOR COMPLETE AND PROPERLY FUNCTIONING SYSTEMS.

B. THIS CONTRACTOR SHALL PAY FOR ALL CUTTING AND PATCH FOR THIS WORK AS REQUIRED.

C. LOCATIONS OF ALL PIPING, FIXTURES AND EQUIPMENT ARE APPROXIMATE ONLY AND MAY BY CHANGED TO MEET STRUCTURAL CONDITIONS AS APPROVED BY ENGINEER.

1.03 APPLICABLE STANDARDS

A. CODE COMPLIANCE: AS A MINIMUM, UNLESS OTHERWISE INDICATED, COMPLY WITH ALL RULES, REGULATIONS,STANDARDS, CODES, ORDINANCES AND LAWS OF LOCAL, STATE AND FEDERAL GOVERNMENTS AND THE AMENDMENTS AND INTERPRETATION OF SUCH RULES, REGULATIONS, STANDARDS, CODES, ORDINANCES AND LAWS OF LOCAL, STATE AND FEDERAL GOVERNMENTS BY THE AUTHORITIES HAVING LAWFUL JURISDICTION.

B. ADA: COMPLY WITH THE REQUIREMENTS OF THE AMERICANS WITH DISABILITIES ACT (ADA).

C. COMPLY: WITH THE NATIONAL FIRE PROTECTION ASSOCIATION (NFPA) STANDARDS AND OTHER CODES AND STANDARDS AS ADOPTED BY THE LOCAL AUTHORITY HAVING JURISDICTION.

D. COMPLY: WITH THE NATIONAL FIRE PROTECTION ASSOCIATION (NFPA) STANDARDS AND OTHER CODES AND STANDARDS INDICATED.

1.04 SUBMITTAL

A. GENERAL: THE PROVISIONS OF THIS SECTION ARE SUPPLEMENTAL TO THE REQUIREMENTS IN DIVISION 1, AND ONLY APPLY TO THE MATERIAL AND EQUIPMENT COVERED IN THESE SPECIFICATIONS.

B. TIME: SUBMIT MANUFACTURER'S LITERATURE, PERFORMANCE DATA AND INSTALLATION INSTRUCTIONS COVERED IN EACH SECTION OF THESE SPECIFICATIONS UNDER AN INDIVIDUAL LETTER OF TRANSMITTAL WITHIN 30 DAYS AFTER NOTICE TO PROCEED UNLESS OTHERWISE INDICATED.

C. SUBMITTER'S REVIEW: ALL ITEMS REQUIRED FOR EACH SECTION SHALL BE REVIEWED BEFORE SUBMITTAL. SUBMITTAL INFORMATION FOR EACH ITEM SHALL BEAR A REVIEW STAMP OF APPROVAL, INDICATING THE NAME OF THE CONTRACTOR AND SUBCONTRACTOR (WHERE APPLICABLE), THE MATERIAL SUPPLIERS, THE INITIALS OF SUBMITTER AND DATE CHECKED. RESPONSIBILITY FOR ERRORS OR OMISSIONS IN SUBMITTALS SHALL NOT BE RELIEVED BY THE ENGINEER'S REVIEW OF SUBMITTALS. RESPONSIBILITY FOR SUBMITTALS CANNOT BE SUBROGATED TO MATERIAL SUPPLIERS BY CONTRACTORS OR SUBCONTRACTORS.

1. REVIEW OF THE SUBMITTAL DATA, WHETHER INDICATED WITH "RELEASED" OR "RELEASED WITH REVIEW COMMENTS" DOES NOT CONSTITUTE AUTHORIZATION FOR OR ACCEPTANCE OF A CHANGE IN THE CONTRACT PRICE.

D. ENGINEER'S REVIEW: THE SUBMITTAL DATA SHALL BE REVIEWED ONLY FOR GENERAL CONFORMANCE WITH THE DESIGN CONCEPT OF THE PROJECT AND FOR GENERAL COMPLIANCE WITH THE CONTRACT DOCUMENTS. ANY ACTION INDICATED IS SUBJECT TO THE REQUIREMENTS OF THE CONTRACT DOCUMENTS. REVIEWS OF SUBMITTAL DATA REVIEW SHALL NOT INCLUDE QUANTITIES; DIMENSIONS (WHICH SHALL BE CONFIRMED AND CORRELATED AT THE JOB SITE); FABRICATION PROCESSES; TECHNIQUES OF CONSTRUCTION; AND COORDINATION OF THE SUBMITTAL DATA WITH ALL OTHER TRADES. COPIES OF THE SUBMITTAL DATA WILL BE RETURNED MARKED "REVIEWED AND RELEASED", "RELEASED AS NOTED", "REVISE AS NOTED AND RESUBMIT", "REJECTED, REVISE AS NOTED AND RESUBMIT".

E. SUBMITTAL ITEMS: SUBMITTAL ITEMS SHALL BE INSERTED IN A TECHNICAL INFORMATION BROCHURE. MARK THE APPROPRIATE SPECIFICATION SECTION OR DRAWING REFERENCE NUMBER IN THE RIGHT HAND CORNER OF EACH ITEM. ALL TYPE WRITTEN PAGES SHALL BE ON THE PRODUCT OR EQUIPMENT MANUFACTURER'S PRINTED LETTERHEAD.

1. MANUFACTURER'S LITERATURE: WHERE INDICATED, INCLUDE THE MANUFACTURER'S PRINTED LITERATURE. LITERATURE SHALL BE CLEARLY MARKED TO INDICATE THE ITEM INTENDED FOR USE.
2. PERFORMANCE DATA: PROVIDE PERFORMANCE DATA, WIRING AND CONTROL DIAGRAMS AND SCALE DRAWINGS WHICH SHOW THAT PROPOSED EQUIPMENT WILL FIT INTO ALLOTTED SPACE (INDICATE AREAS REQUIRED FOR SERVICE ACCESS, CONNECTIONS, ETC.), AND OTHER DATA REQUIRED FOR THE ENGINEER TO DETERMINE THAT THE EQUIPMENT COMPLIES WITH THE CONTRACT DOCUMENTS. WHERE NOTED, PERFORMANCE DATA SHALL BE CERTIFIED BY THE MANUFACTURER AT THE DESIGN RATING POINTS.
3. INSTALLATION INSTRUCTIONS: WHERE REQUESTED, EACH PRODUCT SUBMITTAL SHALL INCLUDE THE MANUFACTURER'S INSTALLATION INSTRUCTIONS. GENERIC INSTALLATION INSTRUCTIONS ARE NOT ACCEPTABLE. INSTRUCTIONS SHALL BE THE SAME AS THOSE INCLUDED WITH THE PRODUCT WHEN IT IS SHIPPED FROM THE FACTORY.
4. WRITTEN OPERATING INSTRUCTIONS: INSTRUCTIONS SHALL BE THE MANUFACTURER'S WRITTEN OPERATING INSTRUCTIONS FOR THE SPECIFIED PRODUCT. IF THE INSTRUCTIONS COVER MORE THAN ONE MODEL OR TYPE OF PRODUCT THEY SHALL BE CLEARLY MARKED TO IDENTIFY THE INSTRUCTIONS THAT COVER THE PRODUCT DELIVERED TO THE PROJECT. OPERATING INSTRUCTIONS SHALL BE SUBMITTED IMMEDIATELY AFTER THE PRODUCT OR EQUIPMENT SUBMITTAL HAS BEEN RETURNED FROM THE ENGINEER MARKED "REVIEWED AND RELEASED".
5. MAINTENANCE INSTRUCTIONS: INFORMATION SHALL BE THE MANUFACTURER'S PRINTED INSTRUCTIONS AND PARTS LISTS FOR THE EQUIPMENT FURNISHED. IF THE INSTRUCTIONS COVER MORE THAN ONE MODEL OR TYPE OF EQUIPMENT THEY SHALL BE MARKED TO IDENTIFY THE INSTRUCTIONS FOR THE FURNISHED PRODUCT. SUBMIT MAINTENANCE INSTRUCTIONS IMMEDIATELY AFTER THE PRODUCT OR EQUIPMENT SUBMITTAL HAS BEEN RETURNED FROM THE ENGINEER MARKED "REVIEWED AND RELEASED".

PART 2: PRODUCTS - GENERAL

1. MANUFACTURERS:

A. SPECIFIED PRODUCTS: MANUFACTURER'S NAMES AND PRODUCT MODEL NUMBERS INDICATED ON THE DRAWINGS AND IN THESE SPECIFICATIONS ESTABLISH THE TYPE, STYLE, QUALITY, PERFORMANCE, AND SOUND RATING OF THE DESIRED PRODUCT.

B. SPACE REQUIREMENTS: ALL MANUFACTURED PRODUCTS FURNISHED ON THIS PROJECT MUST HAVE THE REQUIRED SPACE AND SERVICE AREAS INDICATED IN THE MANUFACTURER'S PRINTED LITERATURE OR SHOWN ON THEIR SHOP DRAWING. WHEN THE MANUFACTURER DOES NOT INDICATE THE SPACE REQUIRED FOR SERVICING THE EQUIPMENT, THE SPACE SHOWN ON THE DRAWINGS OR AS REQUIRED BY THE ENGINEER MUST BE PROVIDED

C. ALL PLUMBING EQUIPMENT SHALL BE INSTALLED, MOUNTED, HANG, ETC. PER MANUFACTURER'S RECOMMENDATIONS AND SHALL BE UL LISTED. ALL MATERIAL AND EQUIPMENT SHALL BE NEW AND WITHOUT DEFECT.

2. MATERIAL AND EQUIPMENT:

A. GENERAL: MATERIAL AND EQUIPMENT USED SHALL BE PRODUCED BY MANUFACTURERS REGULARLY ENGAGED IN THE PRODUCTION OF SIMILAR ITEMS, AND WITH A HISTORY OF SATISFACTORY USE AS JUDGED BY THE ENGINEER.

B. THIS CONTRACTOR SHALL FURNISH AND INSTALL ALL TEMPERATURE CONTROL WIRING, THERMOSTATS, RELAYS, INTERLOCKS, ETC., AS REQUIRED TO MEET THE SEQUENCE OF OPERATIONS.

C. COMPATIBILITY: MATERIAL AND EQUIPMENT OF ONE AND THE SAME KIND, TYPE OR CLASSIFICATION AND USED FOR IDENTICAL OR SIMILAR PURPOSES SHALL BE MADE BY THE SAME MANUFACTURER. WHERE MORE THAN ONE CHOICE IS AVAILABLE, SELECT THE OPTIONS WHICH ARE COMPATIBLE WITH OTHER PRODUCTS ALREADY SELECTED. COMPATIBILITY IS A BASIC GENERAL REQUIREMENT OF PRODUCT SELECTION.

ACCEPTABLE MANUFACTURERS FOR VITREOUS CHINA PLUMBING FIXTURES:
MANUFACTURERS: SUBJECT TO COMPLIANCE WITH REQUIREMENTS, PROVIDE PRODUCTS BY ONE OF THE FOLLOWING:

1) AMERICAN STANDARD, INC.
2) KOHLER CO.
3) MANSFIELD.

ACCEPTABLE MANUFACTURERS FOR FAUCETS:
MANUFACTURERS: SUBJECT TO COMPLIANCE WITH REQUIREMENTS, PROVIDE PRODUCTS BY ONE OF THE FOLLOWING:

1) CHICAGO FAUCETS.
2) DELTA FAUCET CO.
3) T & S BRASS

ACCEPTABLE MANUFACTURERS FOR SHOWER TRIM:
MANUFACTURERS: SUBJECT TO COMPLIANCE WITH REQUIREMENTS, PROVIDE PRODUCTS BY ONE OF THE FOLLOWING:

1) BRADLEY CORP.
2) SYMMONS.
3) ZURN.

ACCEPTABLE MANUFACTURERS FOR FLOOR DRAINS AND CLEANOUTS:
MANUFACTURERS: SUBJECT TO COMPLIANCE WITH REQUIREMENTS, PROVIDE PRODUCTS BY ONE OF THE FOLLOWING:

1) JOSAM
2) ZURN

ACCEPTABLE MANUFACTURERS FOR ELECTRIC AND GAS WATER HEATER:
MANUFACTURERS: SUBJECT TO COMPLIANCE WITH REQUIREMENTS, PROVIDE PRODUCTS BY ONE OF THE FOLLOWING:

1) LOCHINVAR.
2) BRADFORD WHITE.
3) SMITH, A.O. CORPORATION.

FIRE STOPPING:

WHENEVER THE CONTRACTOR COMPROMISES ANY FIRE RESISTIVE CONSTRUCTION, THEY SHALL BE REQUIRED TO REPLACE THE INTEGRITY OF THE FIRE RESISTIVE CONSTRUCTION OR ENVELOPE. THIS MAY REQUIRE A TEMPORARILY SEAL OF THE WALL PENETRATION AT THE END OF THEIR WORK DAY/SHIFT IF THE WORK IS NOT COMPLETED.

AT THE COMPLETION OF THE WORK, THE FIRE RESISTIVE CONSTRUCTION MUST BE SEALED WITH APPROVED FIRE STOPPING MATERIALS. AT THE END OF THE PROJECT THE CONTRACTOR SHALL HAVE COMPLETELY FIRE STOPPED THE WALL, FLOOR, AND CEILING PENETRATIONS AS DETAILED IN THE PUBLICATION "3M FIRE PROTECTION PRODUCTS - CENTRAL OFFICE THROUGH - PENETRATION FIRE STOPPING" AS PREPARED BY 3M CERAMIC MATERIALS DEPARTMENT; EM CENTER; ST. PAUL, MN 55144-1000 - AUTHOR: G.K. KOCH ISSUE DATE 1²⁄4/1991. THE PENETRATION SHALL BE DETAILED IN 3M DRAWING 8000-CPC 12 (VERSION A OR B DEPENDING UPON THE FIRE RATING OF THE EXISTING WALL). CONCRETE/BRICK/BLOCK WALL PENETRATIONS SHALL BE FIRE STOPPED THE SAME AS EXCEPT THE METAL SHEETING SHALL BE ANCHORED APPROPRIATELY TO THE CONCRETE/BRICK/BLOCK.

PIPING

PART 1 - GENERAL

1.01 SUMMARY

A. ALL VALVES THAT ARE TO BE INSTALLED IN INSULATED PIPING SHALL BE PROVIDED WITH A 2-INCH STEM EXTENSION.

B. ALL POTABLE WATER LINES ABOVE FLOOR SHALL BE TYPE L HARD COPPER WITH WROUGHT FITTINGS WITH "STAYSAFE" SOLDER OR PEX PRESS FIT SYSTEM.

C. ALL POTABLE WATER PIPING BELOW SLAB SHALL BE TYPE K SOFT COPPER OR PEX PIPING. NO FITTINGS WILL BE ALLOWED BELOW SLAB.

D. ALL VALVES SHALL BE FULL PORT BALL VALVES. ALL SHUT OFF VALVES SHALL BE EASILY SEEN AND ACCESSIBLE FROM FLOOR OR LADDER. WHERE VALVES MUST BE INSTALLED WITHIN A WALL OR CHASE, CONTRACTOR SHALL PROVIDE AND INSTALL 8-INCH X 8-INCH MINIMUM ACCESS DOOR.

E. FURNISH AND INSTALL VALVES, WHERE INDICATED ON DRAWINGS OR SPECIFIED, SO THAT THEY MAY BE OPERATED, REPAIRED, OR REPLACED WITH MINIMUM EFFORT.

F. ALL POTABLE HOT WATER AND COLD WATER LINES, STORM WATER, STORM WATER OVERFLOW, AND REFRIGERANT SUCTION LINES SHALL BE COVERED WITH CLOSED CELL ELASTOMERIC INSULATION.

PIPE SIZE	INSULATION THICKNESS
UP TO 1 ½"	¾"
1 ½" THRU 8"	1"

G. ALL CONNECTIONS BETWEEN DISSIMILAR PIPE MATERIALS SHALL BE MADE WITH EPCO FITTINGS TO PREVENT GALVANIC ACTION.

H. CHROME PLATED ESCUTCHEONS SHALL BE PROVIDED AT ALL PIPING PENETRATING FLOORS AND WALLS.

I. ALL EXPOSED PIPING LOCATED BELOW FIXTURES SHALL BE CHROME PLATED.

J. ALL HORIZONTAL STORM AND SANITARY DRAINS SHALL BE GIVEN A GRADE OF 1/4-INCH PER FOOT WHERE POSSIBLE BUT NOT LESS THAN 1/8-INCH PER FOOT. COORDINATE WITH SITE CONTRACTOR AS REQUIRED TO MATCH PIPE INVERTS EXTENDING FROM BUILDING.

K. ALL INSULATED PIPING SHALL HAVE SADDLES AND UL LISTED HANGERS.

L. ALL POTABLE WATER LINES SHALL BE TESTED AND DISINFECTED.

M. HANGING OF PIPING SHALL BE ON NOT MORE THAN 10-FOOT CENTERS WITH 3/8-INCH RODS.

N. ALL WASTE AND VENT PIPING BELOW SLAB SHALL BE DWV PVC PIPING AND FITTINGS. ALL WASTE AND VENT PIPING ABOVE SLAB AND LOCATED IN AN AIR PLENUM SHALL BE HUBLESS CAST IRON COMPLYING WITH CISPI 301-99.

O. ALL PIPING SHALL BE SUPPORTED FROM THE BUILDING STRUCTURE BY MEANS OF APPROVED HANGERS AND SUPPORTS. NO PIPING SHALL BE HUNG FROM THE HANGERS OF OTHER TRADES. HANGERS SHALL BE INSTALLED SO AS TO INSURE PROPER PITCH AND GRADE AND PREVENT VIBRATION AS WELL AS ARRANGED TO ALLOW FOR EXPANSION AND CONTRACTION.

EXISTING UTILITIES

THE CONTRACTOR SHALL ASSUME ALL RESPONSIBILITIES FOR ALL EXISTING GAS, STORM, AND SANITARY SEWER LINES WITHIN HIS SITE LIMITS.

BEFORE WORKING WITH OR AROUND THE EXISTING UTILITIES, ANY APPLICABLE UTILITY SHALL BE CONTACTED.

ALL EXISTING UTILITIES ENCOUNTERED DURING CONSTRUCTION SHALL BE THE CONTRACTORS RESPONSIBILITY TO MAINTAIN IN SERVICE. ANY UTILITY THAT CAN BE REMOVED WITHOUT UNDUE INTERRUPTION OF SERVICE MAY BE REMOVED AND REPLACED BY THE CONTRACTOR WITH PERMISSION OF THE OWNER AND THE UTILITY.

THE CONTRACTOR SHALL FAMILIARIZE HIMSELF WITH THE AREA AND NO EXTRA COMPENSATION CONNECTED WITH THE UTILITIES WILL BE ALLOWED.

GENERAL PLUMBING NOTES

ALL WORK SHALL CONFORM TO STATE AND LOCAL PLUMBING AND BACKFLOW PREVENTION CODES, AND THE REQUIREMENTS OF THE LOCAL WATER UTILITY.

EQUIPMENT, DOMESTIC WATER PIPING, SANITARY WASTE, SANITARY VENT, AND STORM PIPING LAYOUTS ARE SCHEMATIC IN NATURE. CONTRACTOR MUST ADJUST TO FIELD CONDITIONS AND COORDINATE WITH OTHER TRADES DURING CONSTRUCTION BY ADDING OFFSETS AND ELBOWS WHERE REQUIRED.

VACUUM BREAKERS MUST BE INSTALLED ON ALL EXISTING OR PROPOSED HOSE THREAD FITTINGS, INCLUDING BUT NOT LIMITED TO HOSE BIBBS, WALL/ YARD HYDRANTS, MOP/ SERVICE SINKS.

A CROSS-CONNECTION CONTROL DEVICE INSPECTOR SHALL TEST ALL BACKFLOW DEVICES AT THE TIME OF INSTALLATION AND SUBMIT REPORTS TO I.T.R. PERSONNEL AND THE LOCAL WATER UTILITY AS REQUIRED.

ALL WATER LINES 3" AND LARGER MUST BE DISINFECTED PER ANSI/ AWWA C651-92. SAMPLES FROM 2 CONSECUTIVE DAYS MUST BE TAKEN TO AN APPROVED TEST LAB. LAB ANALYSES REPORTS SHALL BE SUBMITTED TO THE LOCAL WATER UTILITY AS REQUIRED FOR COMPLIANCE.

COORDINATE EXACT LOCATION OF ROOF DRAINS WITH ARCHITECTURAL AND STRUCTURAL PLANS.

ALL MATERIALS INSTALLED WITHIN PLENUM SHALL HAVE FLAME SPREAD RATING OF NOT MORE THEN 25 AND A SMOKE DEVELOPED RATING NOT EXCEEDING 50 IN ACCORDANCE WITH STATE CODES.

THIS CONTRACTOR SHALL PROVIDE ALL EQUIPMENT, MATERIALS, AND LABOR FOR CORE DRILLING AS REQUIRED FOR INSTALLATION OF PIPING PENETRATING BUILDING CONSTRUCTION.

TYPE "K" COPPER TUBING SHALL BE USED FOR ALL DOMESTIC SUPPLY PLUMBING BELOW SLAB. NO FITTINGS SUCH AS COUPLINGS, TEES, OR ELBOWS SHALL BE USED BELOW OR WITHIN SLAB.

ALL EQUIPMENT USING NATURAL GAS SHALL HAVE A GAS COCK AND DIRT LEG FOR EACH PIECE OF EQUIPMENT.

REFERENCE ARCHITECTURAL DRAWINGS FOR ALL DIMENSIONS, TYPICAL.

ALL EQUIPMENT AND MATERIALS SHALL BE UL LISTED AND LABELED FOR TYPE OF EQUIPMENT AND MATERIALS FOR WHICH LISTING AND LABELING IS AVAILABLE.

GENERAL CONDITIONS NOTE

ALL CONTRACTORS, BY MAKING THEIR BID, REPRESENT THAT THEY HAVE READ AND **UNDERSTAND** THE CONSTRUCTION DOCUMENTS. THE CONTRACTOR SHALL REFER TO THE ENTIRE CONSTRUCTION DOCUMENT SET FOR GUIDANCE ON DIMENSIONS, HEIGHTS, DETAILING, ETC. AND INSTALL THEIR WORK SO AS NOT TO INTERFERE WITH THE INSTALLATION OF ANOTHER DISCIPLINE'S WORK OR THE **GENERAL INTENT** OF THE CONSTRUCTION DOCUMENTS. IN THE EVENT OF A CONFLICT BETWEEN THE SPECIFICATIONS AND/ OR DRAWINGS, THE ARCHITECT SHALL DETERMINE WHICH INFORMATION GOVERNS.

M/P/E TRADES **NOTE**: IN REFERRING TO THIS SHEET YOU ACKNOWLEDGE:
1.) REVIEWING THE **ENTIRE** DRAWING SET INCLUDING ALL 'S', 'C' & 'A' SERIES.
2.) COORDINATING WITH THE GENERAL TRADES CONTRACTOR OR C.M. FOR EXACT DETAILING, HEIGHTS, ETC. **PRIOR** TO INSTALLING WORK.

PLUMBING DEMOLITION SCHEDULE

———— – ————	EXISTING DOMESTIC COLD WATER TO REMAIN
———— – – ————	EXISTING DOMESTIC HOT WATER TO REMAIN
———— – – – ————	EXISTING DOMESTIC HOT WATER RETURN TO REMAIN
- - - - - - - - - - - -	EXISTING VENT TO REMAIN
————G————	EXISTING NATURAL GAS TO REMAIN
————SAN————	EXISTING SANITARY TO REMAIN
————ST————	EXISTING STORM TO REMAIN
— — — —CW— — — — —	EXISTING DOMESTIC COLD WATER TO BE DEMOLISHED
— — — —HW— — — — —	EXISTING DOMESTIC HOT WATER TO BE DEMOLISHED
— — — —HWR— — — — —	EXISTING DOMESTIC HOT WATER RETURN TO BE DEMOLISHED
— — — —V— — — — —	EXISTING VENT TO BE DEMOLISHED
— — — —G— — — — —	EXISTING NATURAL GAS TO BE DEMOLISHED
— — — —SAN— — — — —	EXISTING SANITARY TO BE DEMOLISHED
— — — —ST— — — — —	EXISTING STORM TO BE DEMOLISHED
⧓	EXTENT OF DEMOLITION

GENERAL PLUMBING DEMOLITION NOTES

CONTRACTOR SHALL DISPOSE OF ALL REMOVED EQUIPMENT, PIPING, DUCTWORK, ETC. UNLESS NOTED OTHERWISE.

CUT AND PATCH ALL EXISTING TO REMAIN SURFACES AFFECTED BY THIS DEMOLITION. IF NEW FINISHES ARE NOT INCLUDED BY OTHERS ON THIS PROJECT, THIS CONTRACTOR SHALL RESTORE ALL FINISHES TO MATCH SURROUNDING UNDAMAGED CONDITIONS.

THIS CONTRACTOR IS RESPONSIBLE FOR REMOVING AND REINSTALLING ANY EXISTING CEILING TILES AND GRID AFFECTED BY THIS WORK. REPLACE ANY TILES DAMAGED AS A RESULT OF THE ABOVE WORK. TILES SHALL MATCH SURROUNDING CONDITIONS THAT ARE NOT COVERED UNDER DEMOLITION WORK TO BE PERFORMED BY OTHERS.

ANY EXISTING PIPING, CONDUIT WIRING, EQUIPMENT, ETC. THAT IS SUPPORTED FROM MATERIALS THAT ARE TO BE REMOVED SHALL BE SUPPORTED BY NEW HANGING DEVICES PROVIDED AND INSTALLED BY THIS CONTRACTOR.

CAP EXISTING WASTE, VENT, AND WATER PIPING IN CONCEALED LOCATIONS IN WALLS TO REMAIN, ABOVE CEILING, OR BELOW SLABS FOR ALL FIXTURES AND EQUIPMENT TO BE REMOVED OR RELOCATED, VERIFY EXACT LOCATION OF EXISTING PIPING.

THESE DRAWINGS ARE A REASONABLE INDICATION OF EXISTING PIPING, DUCTWORK, AND EQUIPMENT CONDITIONS. CONTRACTOR SHALL FIELD VERIFY EXACT LOCATIONS AND CONDITIONS AS REQUIRED.

OWNER SHALL RETAIN THE FIRST RIGHT OF REFUSAL FOR ALL PRODUCTS TO BE REMOVED.

PLUMBING SYMBOL SCHEDULE

	BALL VALVE
	BUTTERFLY VALVE
	PRESSURE REDUCING STATION
	PRESSURE REDUCING VALVE
⋈	GATE VALVE
	GLOBE VALVE
	TEMPERATURE MIXING VALVE
	GAS COCK
	GAS TURRET
—◁	COMPRESSED AIR TURRET
	CHECK VALVE
	IN LINE PUMP
	STRAINER
	AUTOMATIC FLOW VALVE
	MANUAL FLOW CONTROL VALVE
	UNION
Ⓜ	ACTUATOR
M	METER
	PIPING DROP
	INLINE PIPING DROP
—●	PIPING RISE
	PIPE CAP
	PIPE BREAK
	WALL CLEANOUT/ END FERRULE CLEANOUT
	TIE-IN
Ⓣ	THERMOMETER
Ⓧ	WATER HAMMER ARRESTOR TAG (SHOCK ABSORBER)
	SHOCK ABSORBER
⊖	CLEAN OUT
○	FLOOR DRAIN
	FLOOR SINK
◎	ROOF DRAIN
	VENT THROUGH ROOF
—+	WALL HYDRANT/ HOSE BIBB
◁	SHOWER HEAD
	REDUCED PRESSURE PRINCIPLE BACKFLOW PREVENTER

————SAN————	SANITARY DRAIN ABOVE FLOOR
— — SAN — —	SANITARY DRAIN BELOW FLOOR
————ST————	STORM DRAIN ABOVE FLOOR
— — ST — —	STORM DRAIN BELOW FLOOR
————G————	GAS
- - - - - - - - - - - -	VENT
———— – ————	COLD WATER
————RAW————	DOMESTIC WATER (RAW)
———— – – ————	HOT WATER
——— – – – ———	HOT WATER RECIRC
————AW————	ABOVE GROUND ACID WASTE
— — AW — —	BELOW GRADE ACID WASTE
CO-	CLEANOUT
DF-	DRINKING FOUNTAIN
EDS-	EMERGENCY DRENCH SHOWER
EEW-	EMERGENCY EYE WASH
ET-	EXPANSION TANK
EWC-	ELECTRIC WATER COOLER
EWH-	ELECTRIC WATER HEATER
FD-	FLOOR DRAIN
GD-	GARBAGE DISPOSER
GWH-	GAS WATER HEATER
HB-	HOSE BIBB
L-	LAVATORY
MB-	MOP BASIN
RD-	ROOF DRAIN
RPBP-	REDUCED PRESSURE PRINCIPLE BACKFLOW PREVENTER
S-	SINK
SH-	SHOWER
SP-	SUMP PUMP
TD-	TRENCH DRAIN
TMV-	TEMPERATURE MIXING VALVE
U-	URINAL
VTR-	VENT THROUGH ROOF
WB-	WALL BOX
WC-	WATER CLOSET
WH-	WALL HYDRANT
YH-	YARD HYDRANT
"H"	SUFFIX INDICATES HANDICAP ACCESSIBLE
A.F.F.	ABOVE FINISHED FLOOR

REV	DESCRIPTION	BY	DATE

THOMAS P. OFFERLE
No. 10303150

T Offerle

SCO ENGINEERING, LLC
SOLUTIONS PROVIDED • PROBLEMS SOLVED
FORT WAYNE
6534 Constitution Drive
Fort Wayne, IN 46804
(260) 436-9213
(260) 432-5481 fax
scofw@sco-llc.com

JONES
PETRIE
RAFINSKI
South Bend, IN
p: 574.232.4388
Fort Wayne, IN
p: 260.422.2522

TOLL ROAD MAINTENANCE BARN
4504 N. FAIL RD LA PORTE, IN 46350
7200 N. 600 W SHIPSHEWANA, IN 46565
7565 N. 650 W ORLAND, IN 46776

ITRCC

3200 CASSOPOLIS STREET ELKHART, IN 46514

M2, M4, M5 PLUMBING GENERAL INFORMATION

DESIGNED BY:

REVIEWED BY:

DRAWN BY:

DATE: 1/23/2025
BID SET

JOB NUMBER: 2024-01323

SCALE: As indicated

M2, M4, M5 -P001

PLUMBING DEMOLITION PLAN NOTES

1. REMOVE PIPING TO POINT INDICATED AND PREPARE AREA FOR NEW WORK. SAWCUT FLOOR AS REQUIRED FOR UNDERGROUND PIPING.
2. REMOVE EXISTING DOMESTIC WATER HEATER COMPLETE INCLUDING ALL ASSOCIATED PUMPS, EXPANSION TANK, AIR SEPARATOR, CONTROLS AND SENSORS, AND PIPING TO POINT INDICATED AND PREPARE AREA FOR NEW WORK.
3. REMOVE NATURAL GAS PIPING TO POINT INDICATED AND PREPARE PIPING FOR NEW WORK.

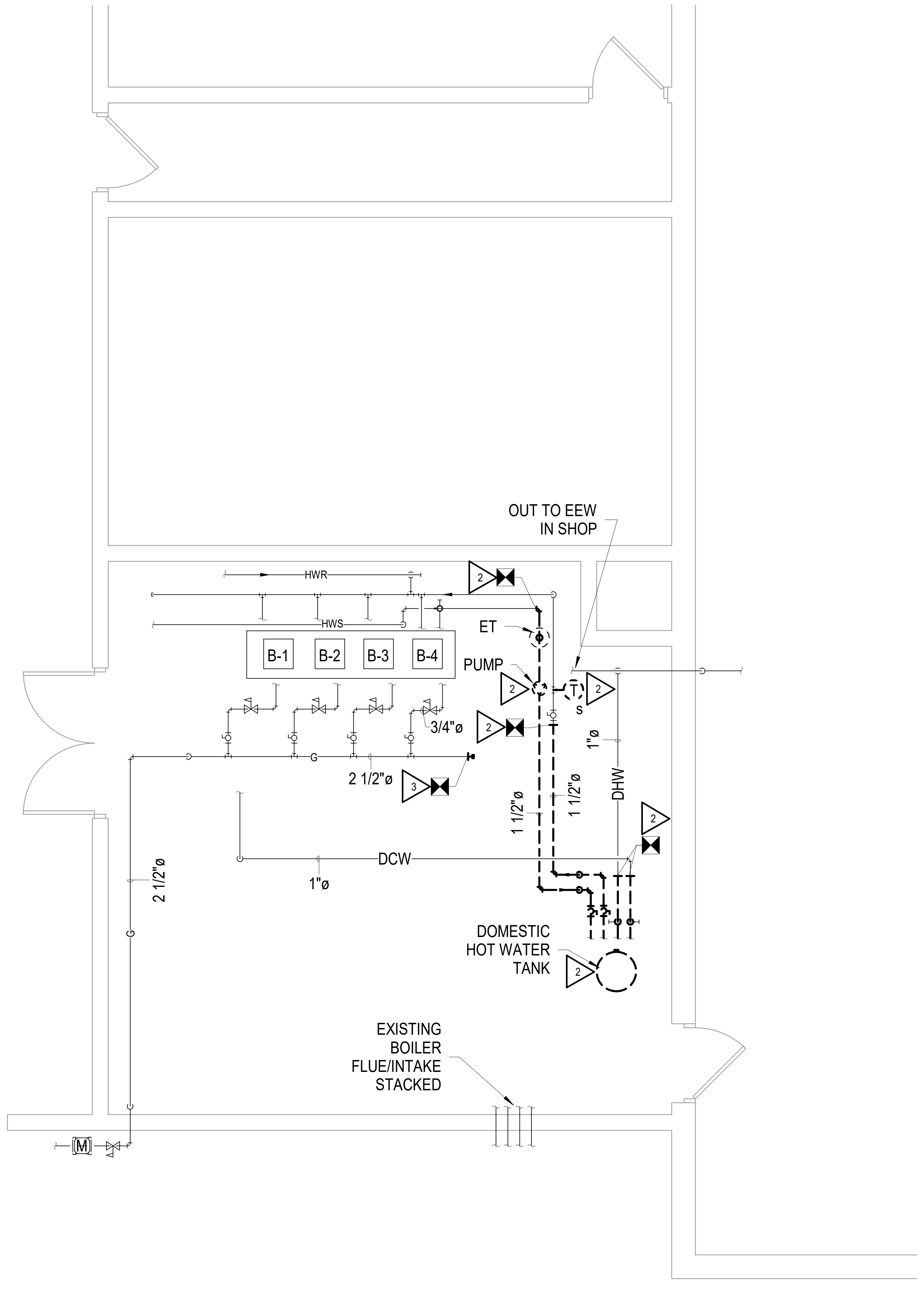
HWR
HWS
B-1
B-2
B-3
B-4
OUT TO EEW IN SHOP
2
ET
PUMP
2
T
S
2
3/4"ø
2
1"ø
G
2 1/2"ø
3
1 1/2"ø
1 1/2"ø
DHW
2
DCW
1"ø
2 1/2"ø
G
DOMESTIC HOT WATER TANK
2
EXISTING BOILER FLUE/INTAKE STACKED
M

3 M2-P101 **M2 BOILER ROOM DEMOLITION PLAN**

1/4" = 1'-0"

N

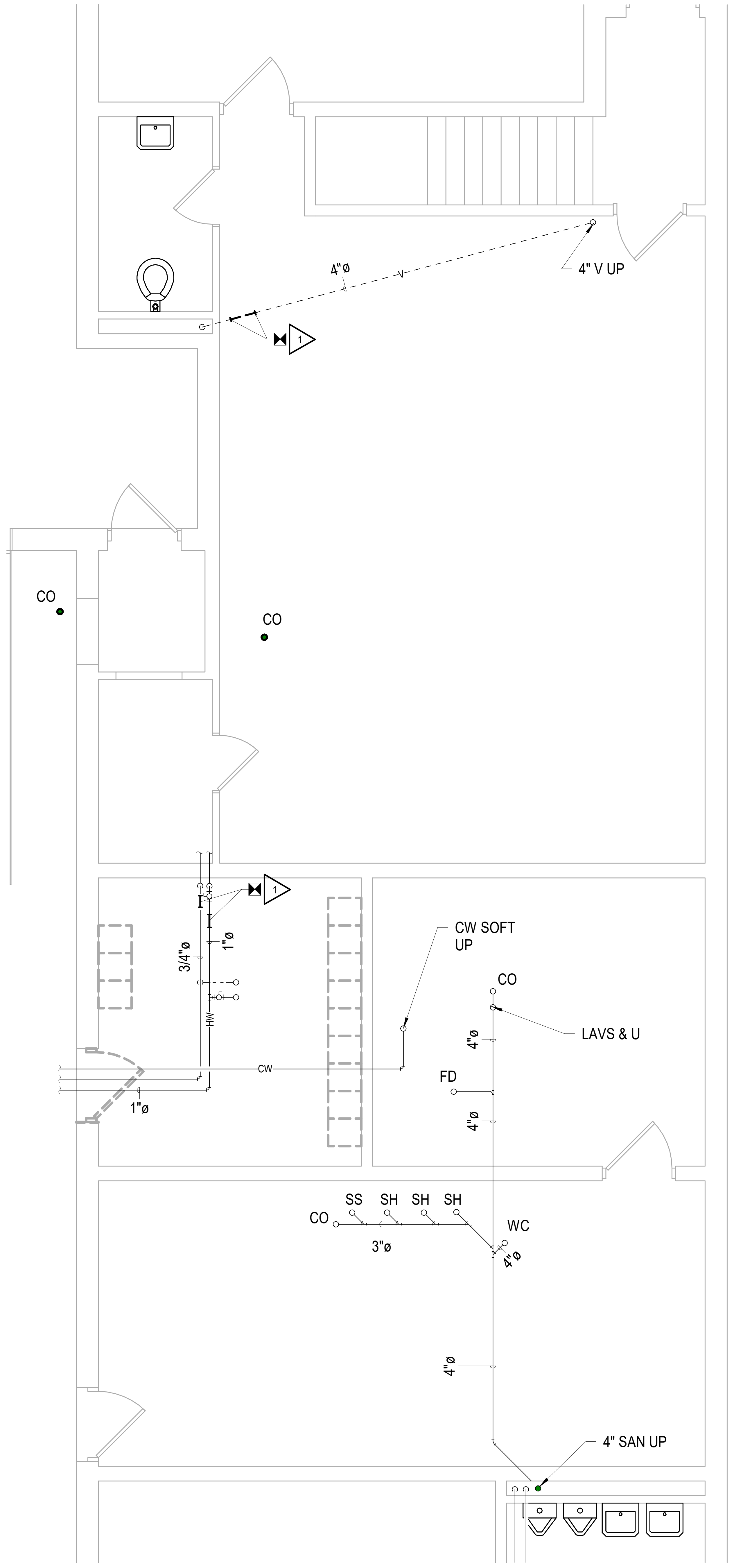
4"ø
V
4" V UP
1
CO
CO
1
3/4"ø
1"ø
HW
CW
1"ø
CW SOFT UP
CO
LAVS & U
4"ø
FD
4"ø
SS
SH
SH
SH
CO
3"ø
WC
4"ø
4"ø
4" SAN UP

2 M2-P101 **M2 PLUMBING DEMOLITION PLAN**

1/4" = 1'-0"

N

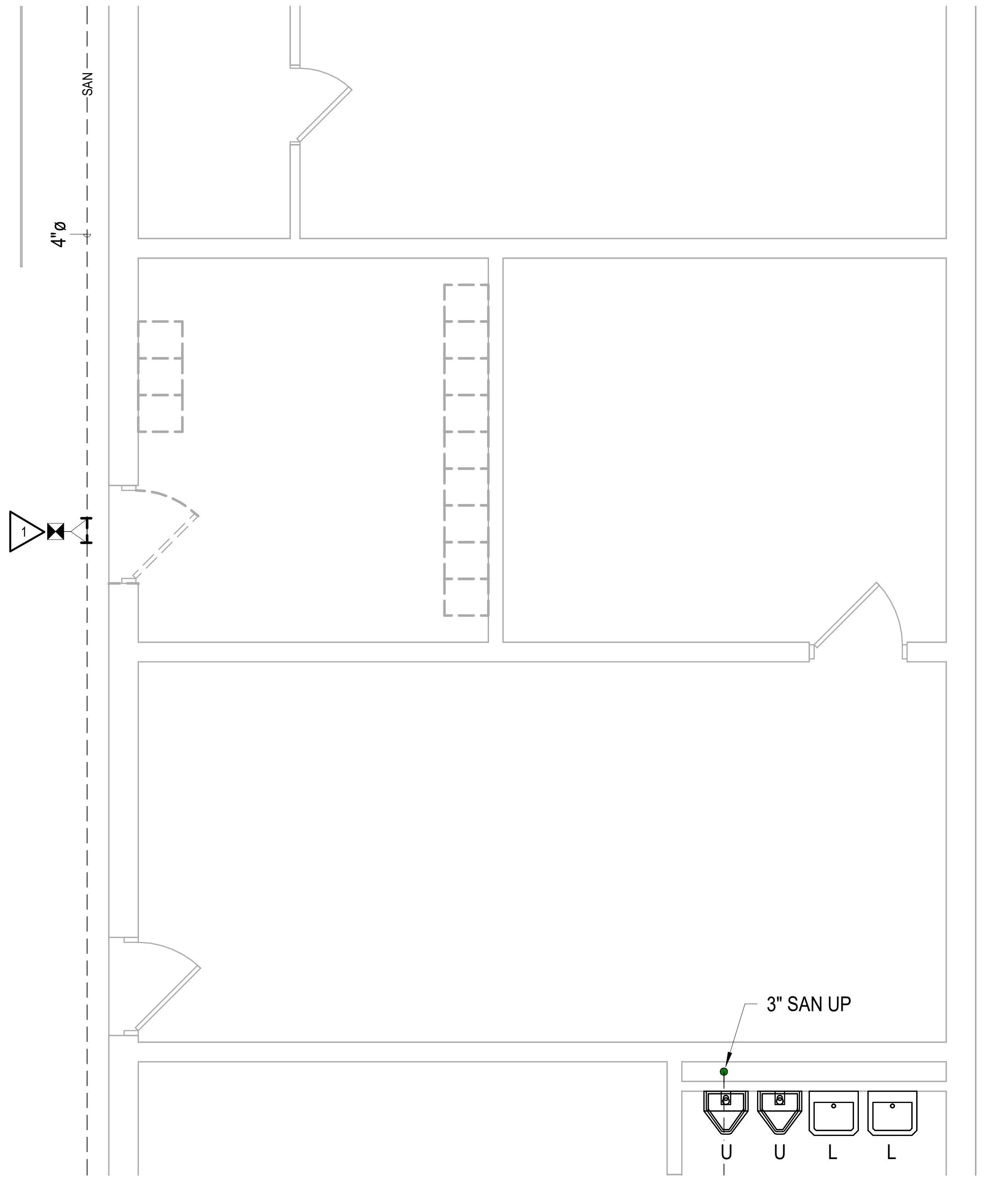
SAN
4"ø
1
3" SAN UP
U
U
L
L

1 M2-P101 **M2 UNDERGROUND PLUMBING DEMOLITION PLAN**

1/4" = 1'-0"

N

1/22/2025 10:49:48 AM

REV	DESCRIPTION	BY	DATE

THOMAS P. OFFERLE
No. 10303150

SCO ENGINEERING, LLC
SOLUTIONS PROVIDED • PROBLEMS SOLVED
FORT WAYNE
6534 Constitution Drive
Fort Wayne, IN 46804
(260) 436-9213
(260) 432-5481 fax
scofw@sco-llc.com

JONES
PETRIE
RAFINSKI
South Bend, IN
p: 574.232.4388
Fort Wayne, IN
p: 260.422.2522

TOLL ROAD MAINTENANCE BARN
M-2: 4504 N. FAIL RD LA PORTE, IN 46350
M-4: 7200 N. 600 W SHIPSHEWANA, IN 46565
M-5: 7565 N. 650 W ORLAND, IN 46776

ITRCC
3200 CASSOPOLIS STREET
ELKHART, IN 46514

M2 PLUMBING DEMOLITION PLANS

DESIGNED BY: Designer
REVIEWED BY: Checker
DRAWN BY: Author
DATE: 1/23/2025 BID SET
JOB NUMBER: 2024-01323
SCALE: As indicated

M2-P101

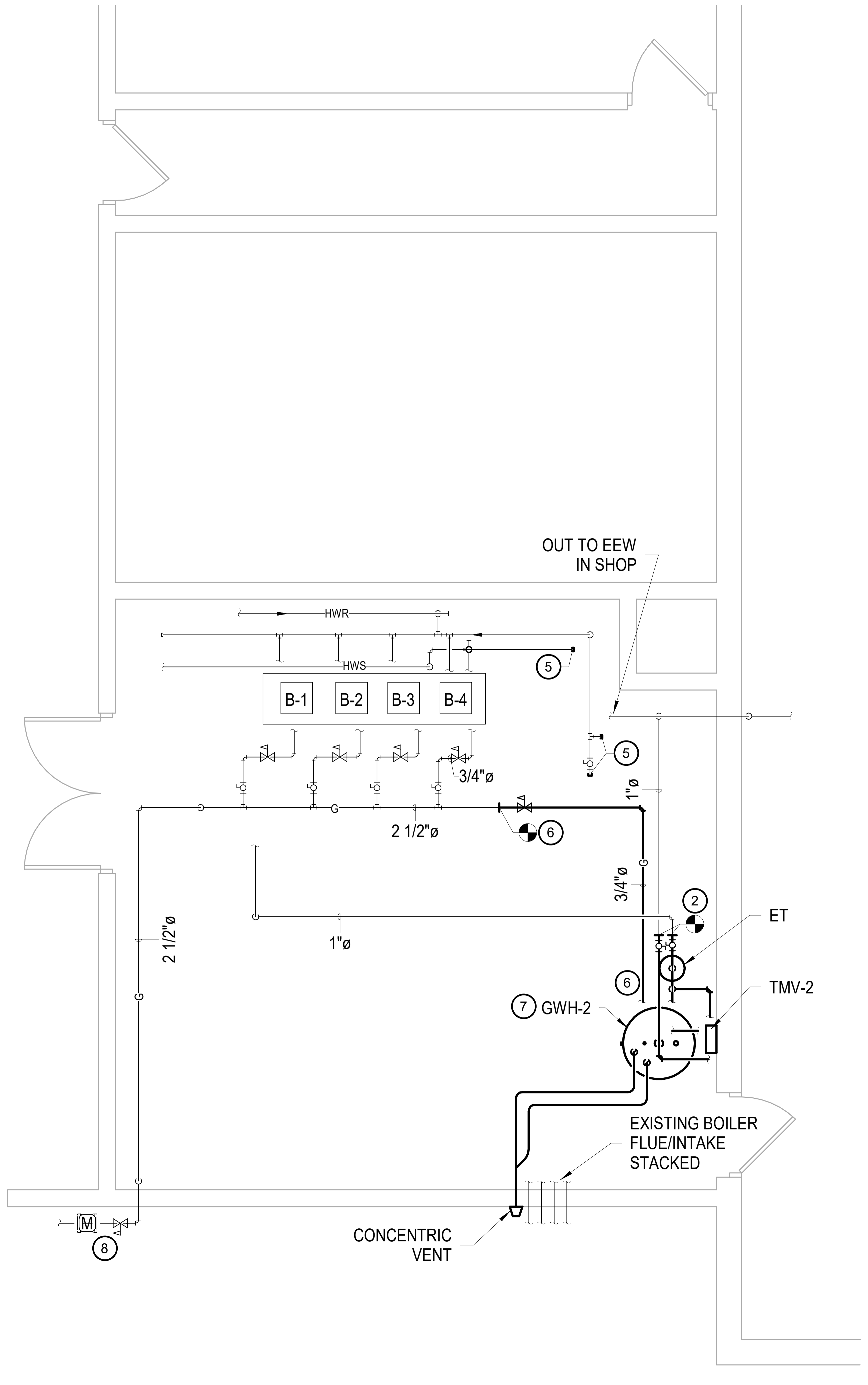
OUT TO EEW
IN SHOP
HWR
HWS
B-1
B-2
B-3
B-4
⑤
⑤
3/4"ø
⑥
2 1/2"ø
1"ø
3/4"ø
1"ø
2 1/2"ø
②
ET
⑥
TMV-2
⑦ GWH-2
EXISTING BOILER
FLUE/INTAKE
STACKED
CONCENTRIC
VENT
M
⑧

M2 BOILER ROOM PLAN

3 M2-P201 1/4" = 1'-0"

N

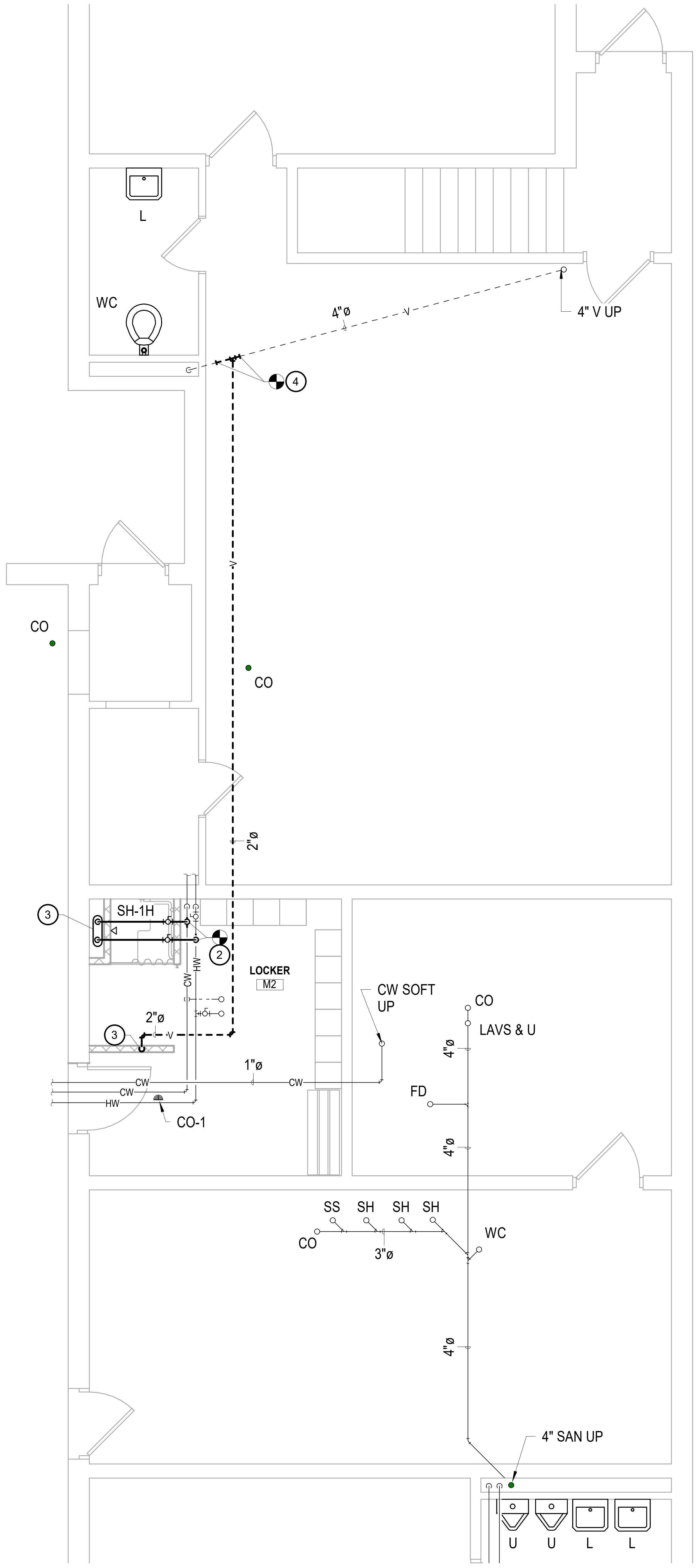
L
WC
4"ø
④
4" V UP
CO
CO
2"ø
③
SH-1H
②
LOCKER
M2
③
2"ø
CW
HW
1"ø
CW
CW
HW
CO-1
CW SOFT
UP
CO
LAVS & U
4"ø
FD
4"ø
SS
SH
SH
SH
CO
3"ø
WC
4"ø
4" SAN UP
U
U
L
L

M2 PLUMBING PLAN

2 M2-P201 1/4" = 1'-0"

N

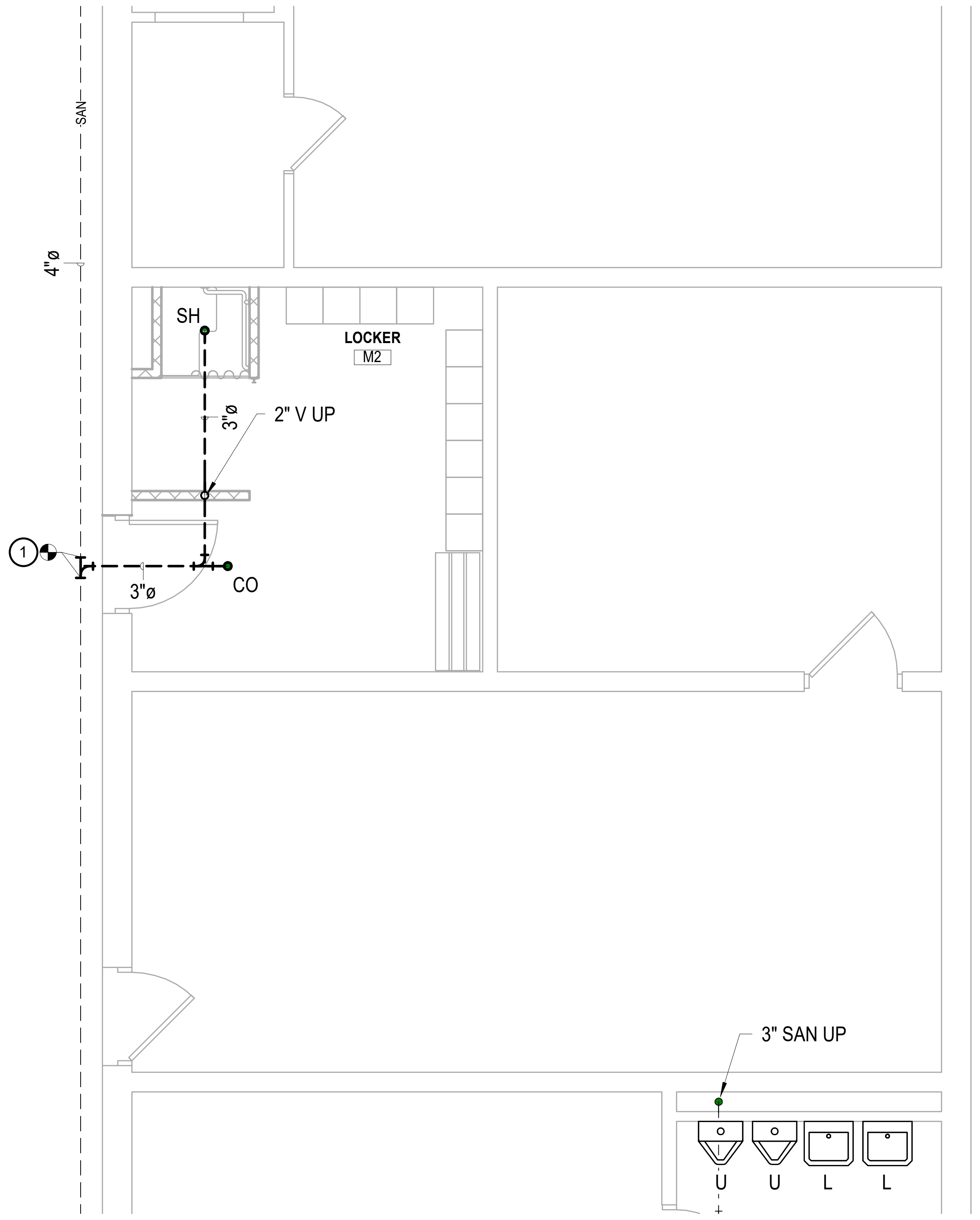
SAN
4"ø
SH
LOCKER
M2
3"ø
2" V UP
①
3"ø
CO
3" SAN UP
U
U
L
L

M2 UNDERGROUND PLUMBING PLAN

1 M2-P201 1/4" = 1'-0"

N

PLUMBING PLAN NOTES

① TIE INTO EXISTING UNDERGROUND SANITARY PIPING AND ROUTE AS INDICATED SAWCUT, PATCH, AND REPAIR FLOOR TO MATCH SURROUNDING CONDITIONS. REFER TO ARCHITECTURAL PLANS FOR ADDITIONAL INFORMATION.

② TIE INTO EXISTING DOMESTIC WATER PIPING AND ROUTE AS INDICATED.

③ ROUTE 3/4" HW, 3/4" CW, AND 2" VENT PIPING DOWN WITHIN WALL FOR FINAL CONNECTION TO NEW PLUMBING FIXTURE. REFER TO PLUMBING FIXTURE SCHEDULE FOR ADDITIONAL INFORMATION.

④ TIE NEW 2" VENT PIPING INTO EXISTING 4" VENT PIPING.

⑤ PROVIDE AND INSTALL CAP ON EXISTING PIPING.

⑥ TIE INTO EXISTING NATURAL GAS PIPING AND ROUTE AS INDICATED FOR FINAL CONNECTION TO NEW GAS FIRED WATER HEATER. PROVIDE AND INSTALL ALL NECESSARY PRESSURE REDUCING VALVES AS REQUIRED FOR APPROVED EQUIPMENT PRESSURE REQUIREMENTS AND VENT TO OUTDOORS. CONTRACTOR TO CONFIRM EXISTING GAS PRESSURE PRIOR TO ORDERING. REFER TO NATURAL GAS HOOKUP DETAIL FOR ADDITIONAL INFORMATION.

⑦ PROVIDE AND INSTALL NEW GAS WATER HEATER COMPLETE INCLUDING ALL VALVES, PIPING, WIRING, AND SPECIALTIES. ROUTE 4" PVC FLUE AND INTAKE AS INDICATED FOR TERMINATION TO CONCENTRIC VENT KIT. MAINTAIN ALL REQUIRED CLEARANCES.

⑧ CONTRACTOR TO COORDINATE WITH LOCAL GAS UTILITIES TO PROVIDE NEW METER AS REQUIRED BASED ON ADDITIONAL NATURAL GAS REQUIREMENTS FOR THE NEW EQUIPMENT AS PART OF THIS PROJECT TOTAL ADDITIONAL CALCULATED CONNECTED LOAD OF 285 CFH. INCLUDE ALL ASSOCIATED COSTS TO REPLACE CURRENT PRESSURE REGULATORS AS REQUIRED FOR NEW GAS LOAD REQUIREMENTS INCLUDE ALL ASSOCIATED FEES FROM LOCAL UTILITIES IN BID.

REV	DESCRIPTION	BY	DATE

THOMAS P. OFFERLE
REGISTERED
No.
10303150
STATE OF
INDIANA
PROFESSIONAL ENGINEER

TOffele

SCO ENGINEERING, LLC
SOLUTIONS PROVIDED • PROBLEMS SOLVED
FORT WAYNE
6534 Constitution Drive
Fort Wayne, IN 46804
(260) 436-9213
(260) 432-5481 fax
scofw@sco-llc.com

JPR
JONES
PETRIE
RAFINSKI
South Bend, IN
p: 574.232.4388
Fort Wayne, IN
p: 260.422.2522

TOLL ROAD MAINTENANCE BARN
M-2: 4504 N. FAIL RD LA PORTE, IN 46350
M-4: 7200 N. 600 W SHIPSHEWANA, IN 46565
M-5: 7565 N. 650 W ORLAND, IN 46776

ITRCC
3200 CASSOPOLIS STREET
ELKHART, IN 46514

M2 PLUMBING PLANS

DESIGNED BY:
Designer

REVIEWED BY:
Checker

DRAWN BY:
Author

DATE: 1/23/2025
BID SET

JOB NUMBER: 2024-01323

SCALE:
As indicated

M2-P201

1/22/2025 11:42:55 AM

PLUMBING DEMOLITION PLAN NOTES

1. REMOVE PIPING TO POINT INDICATED AND PREPARE AREA FOR NEW WORK. SAWCUT FLOOR AS REQUIRED FOR UNDERGROUND PIPING.

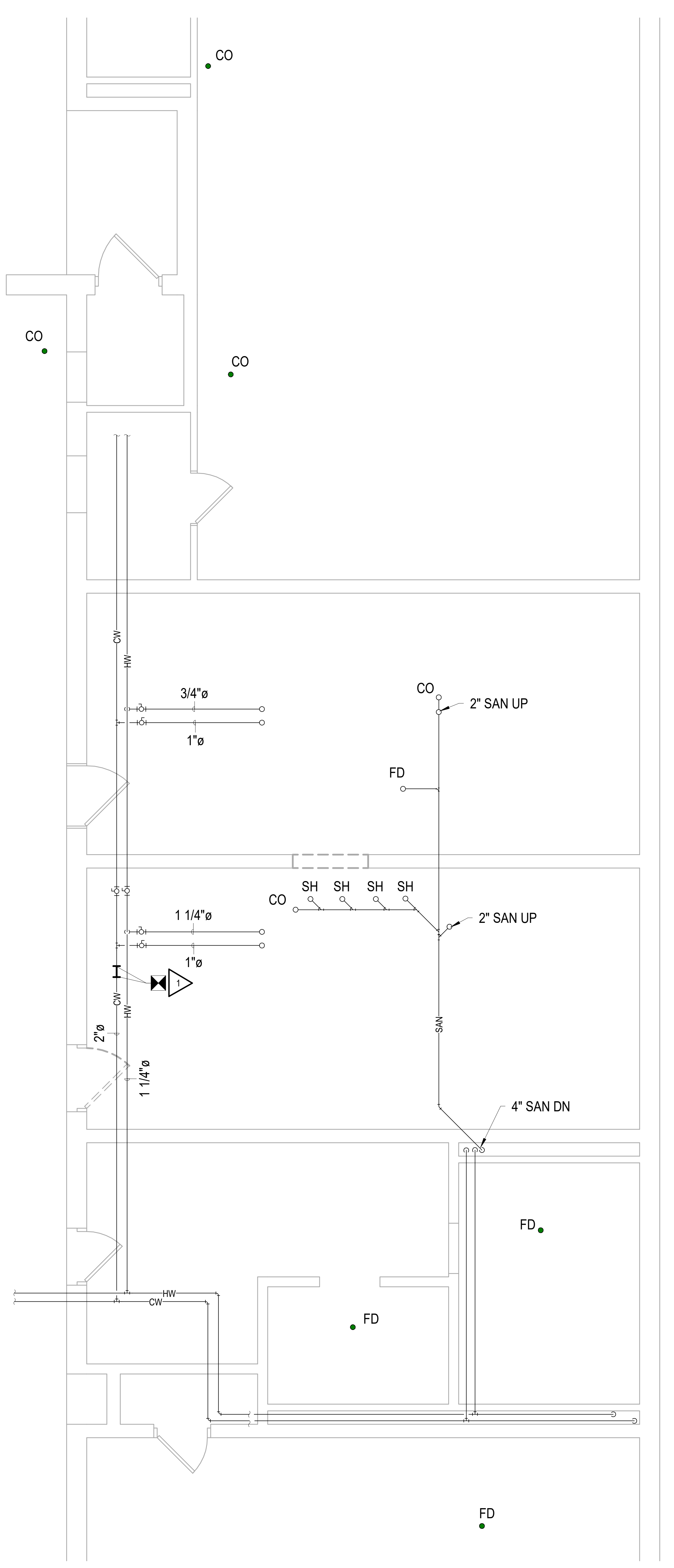
CO
CO
CO
CW
HW
3/4"ø
1"ø
CO
2" SAN UP
FD
CO
SH
SH
SH
SH
1 1/4"ø
2" SAN UP
1"ø
1
CW
HW
2"ø
1 1/4"ø
SAN
4" SAN DN
FD
HW
CW
FD
FD

2 M4-P101 **M4 PLUMBING DEMOLITION PLAN**
1/4" = 1'-0"

N

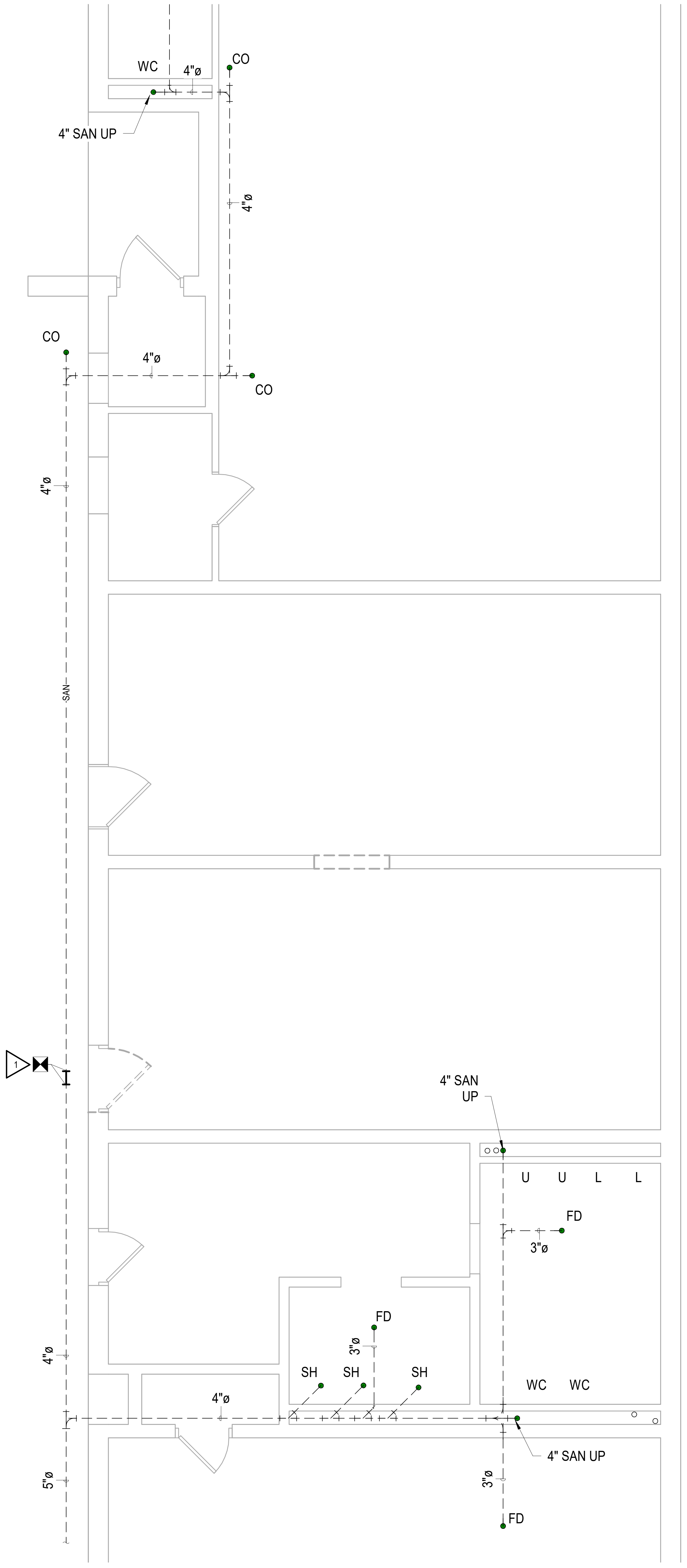
WC
4"ø
CO
4" SAN UP
4"ø
4"ø
CO
CO
4"ø
SAN
1
4" SAN UP
U
U
L
L
FD
3"ø
FD
3"ø
SH
SH
SH
WC
WC
4"ø
4"ø
4" SAN UP
5"ø
3"ø
FD

1 M4-P101 **M4 UNDERGROUND PLUMBING DEMOLITION PLAN**
1/4" = 1'-0"

N

1/22/2025 10:49:49 AM

REV	DESCRIPTION	BY	DATE

THOMAS P. OFFERLE
No. 10303150

SCO ENGINEERING, LLC
SOLUTIONS PROVIDED • PROBLEMS SOLVED
FORT WAYNE
6534 Constitution Drive
Fort Wayne, IN 46804
(260) 436-9213
(260) 432-5481 fax
scofw@sco-llc.com

JONES
PETRIE
RAFINSKI
South Bend, IN
p: 574.232.4388
Fort Wayne, IN
p: 260.422.2522

TOLL ROAD MAINTENANCE BARN
M-2: 4504 N. FAIL RD LA PORTE, IN 46350
M-4: 7200 N. 600 W SHIPSHEWANA, IN 46565
M-5: 7565 N. 650 W ORLAND, IN 46776

ITRCC
3200 CASSOPOLIS STREET
ELKHART, IN 46514

M4 PLUMBING DEMOLITION PLANS

DESIGNED BY: Designer
REVIEWED BY: Checker
DRAWN BY: Author
DATE: 1/23/2025 BID SET
JOB NUMBER: 2024-01323
SCALE: As indicated

M4-P101

PLUMBING PLAN NOTES

① TIE INTO EXISTING UNDERGROUND SANITARY PIPING AND ROUTE AS INDICATED SAWCUT, PATCH, AND REPAIR FLOOR TO MATCH SURROUNDING CONDITIONS. REFER TO ARCHITECTURAL PLANS FOR ADDITIONAL INFORMATION.

② TIE INTO EXISTING DOMESTIC WATER PIPING AND ROUTE AS INDICATED.

③ PROVIDE AND INSTALL NEW ELECTRIC WATER HEATER COMPLETE, INCLUDING TMV, VALVES, AND SPECIALTIES. PROVIDE AND INSTALL ON SUPPORT STAND. REFER TO ELECTRIC WATER HEATER DETAIL FOR ADDITONAL INFORMATION.

④ ROUTE 3/4" HW, 3/4" CW, AND 2" VENT PIPING DOWN WITHIN WALL FOR FINAL CONNECTION TO NEW PLUMBING FIXTURE. REFER TO PLUMBING FIXTURE SCHEDULE FOR ADDITIONAL INFORMATION.

⑤ ROUTE 3/4" CW AND 2" VENT PIPING DOWN WITHIN WALL FOR FINAL CONNECTION TO NEW PLUMBING FIXTURE. REFER TO PLUMBING FIXTURE SCHEDULE FOR ADDITIONAL INFORMATION.

⑥ SAWCUT EXISTING WALL FOR ACCESS TO EXISTING 4" VENT PIPING ROUTED UP TO SECOND FLOOR AND TIE NEW 3" VENT PIPING INTO EXISTING 4" VENT PIPING. PATCH AND REPAIR WALL TO MATCH SURROUNDING CONDITIONS.

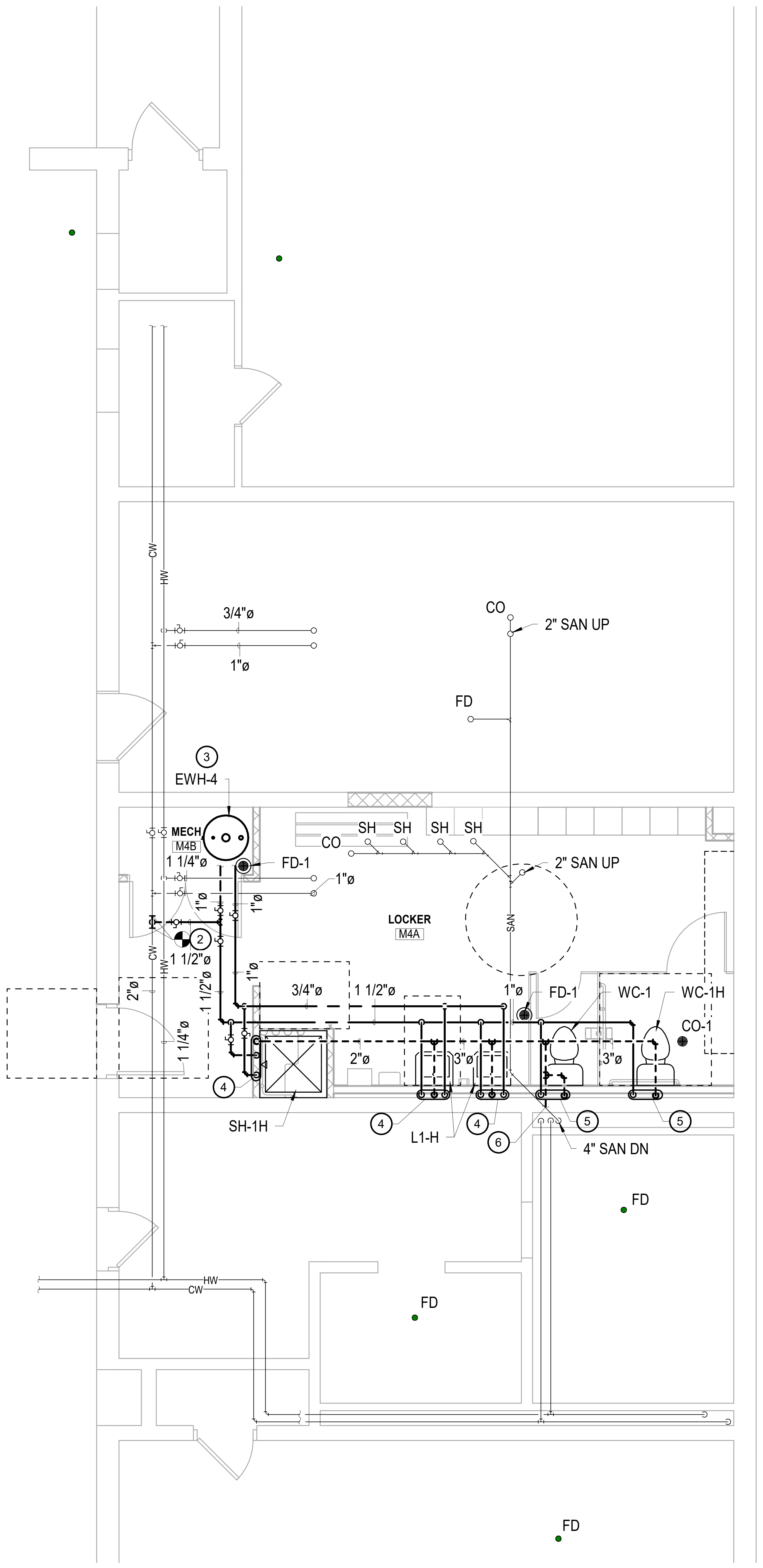
CW
HW
3/4"ø
1"ø
CO
2" SAN UP
FD
③
EWH-4
MECH
M4B
1 1/4"ø
FD-1
1"ø
1"ø
1"ø
②
1 1/2"ø
SH
SH
SH
SH
CO
2" SAN UP
LOCKER
M4A
SAN
2"ø
1 1/4"ø
1 1/2"ø
1"ø
3/4"ø
1 1/2"ø
1"ø
FD-1
WC-1
WC-1H
CO-1
2"ø
3"ø
3"ø
④
SH-1H
④
L1-H
④
⑥
⑤
⑤
4" SAN DN
FD
FD
HW
CW
FD

2 M4-P201 M4 PLUMBING PLAN

1/4" = 1'-0"

N

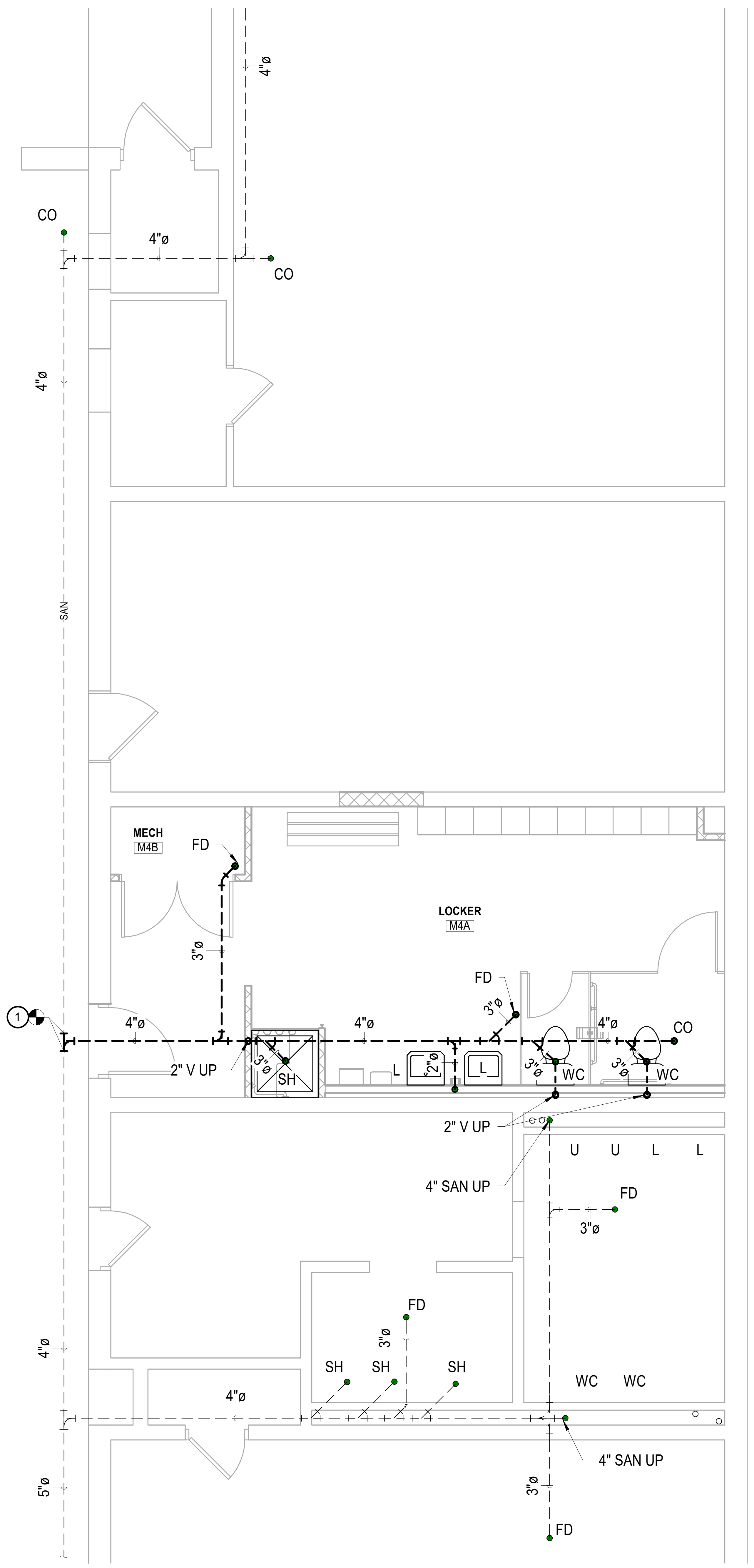
4"ø
CO
4"ø
CO
4"ø
SAN
MECH
M4B
FD
3"ø
LOCKER
M4A
FD
3"ø
①
4"ø
4"ø
4"ø
CO
2" V UP
3"ø
SH
L
2"ø
L
3"ø
WC
3"ø
WC
2" V UP
U
U
L
L
4" SAN UP
FD
3"ø
FD
3"ø
SH
SH
SH
4"ø
WC
WC
4"ø
4" SAN UP
5"ø
3"ø
FD

1 M4-P201 M4 UNDERGROUND PLUMBING PLAN

1/4" = 1'-0"

N

1/22/2025 10:49:49 AM

REV	DESCRIPTION	BY	DATE

The concepts, designs, plans, details and other information as shown on this document are the sole property of JPR and were created, developed, and presented for use on this specific project. one of the concepts, designs, plans, details or other information hereon shall be used or disseminated without the expressed written permission of JPR. © 2024 JPR - All Rights Reserved.

THOMAS P. OFFERLE
No. 10303150

Hofferle

SCO ENGINEERING, LLC
SOLUTIONS PROVIDED • PROBLEMS SOLVED

FORT WAYNE
6534 Constitution Drive
Fort Wayne, IN 46804

(260) 436-9213
(260) 432-5481 fax
scofw@sco-llc.com

JONES PETRIE RAFINSKI

South Bend, IN
p: 574.232.4388

Fort Wayne, IN
p: 260.422.2522

TOLL ROAD MAINTENANCE BARN

M-2: 4504 N. FAIL RD
M-4: 7200 N. 600 W
M-5: 7565 N. 650 W

LA PORTE, IN 46350
SHIPSHEWANA, IN 46565
ORLAND, IN 46776

ITRCC

3200 CASSOPOLIS STREET
ELKHART, IN 46514

M4 PLUMBING PLANS

DESIGNED BY:
SJB

REVIEWED BY:
TEH

DRAWN BY:
TEH

DATE: 1/23/2025
BID SET

JOB NUMBER: 2024-01323

SCALE:
As indicated

M4-P201

PLUMBING DEMOLITION PLAN NOTES

1	REMOVE PIPING TO POINT INDICATED AND PREPARE AREA FOR NEW WORK. SAWCUT FLOOR AS REQUIRED FOR UNDERGROUND PIPING.

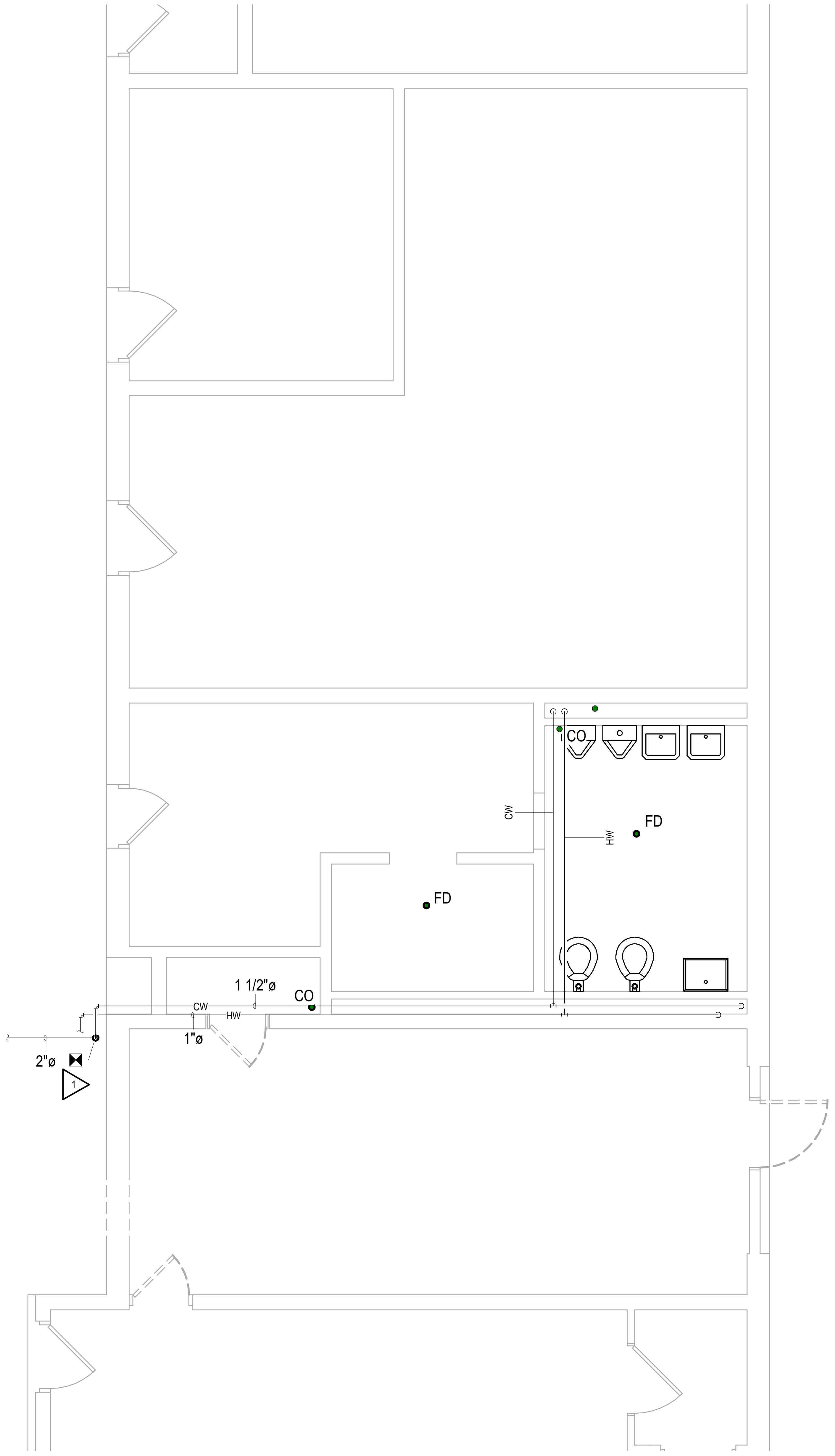

2 M5-P101 **M5 PLUMBING DEMOLITION PLAN**
1/4" = 1'-0"

N

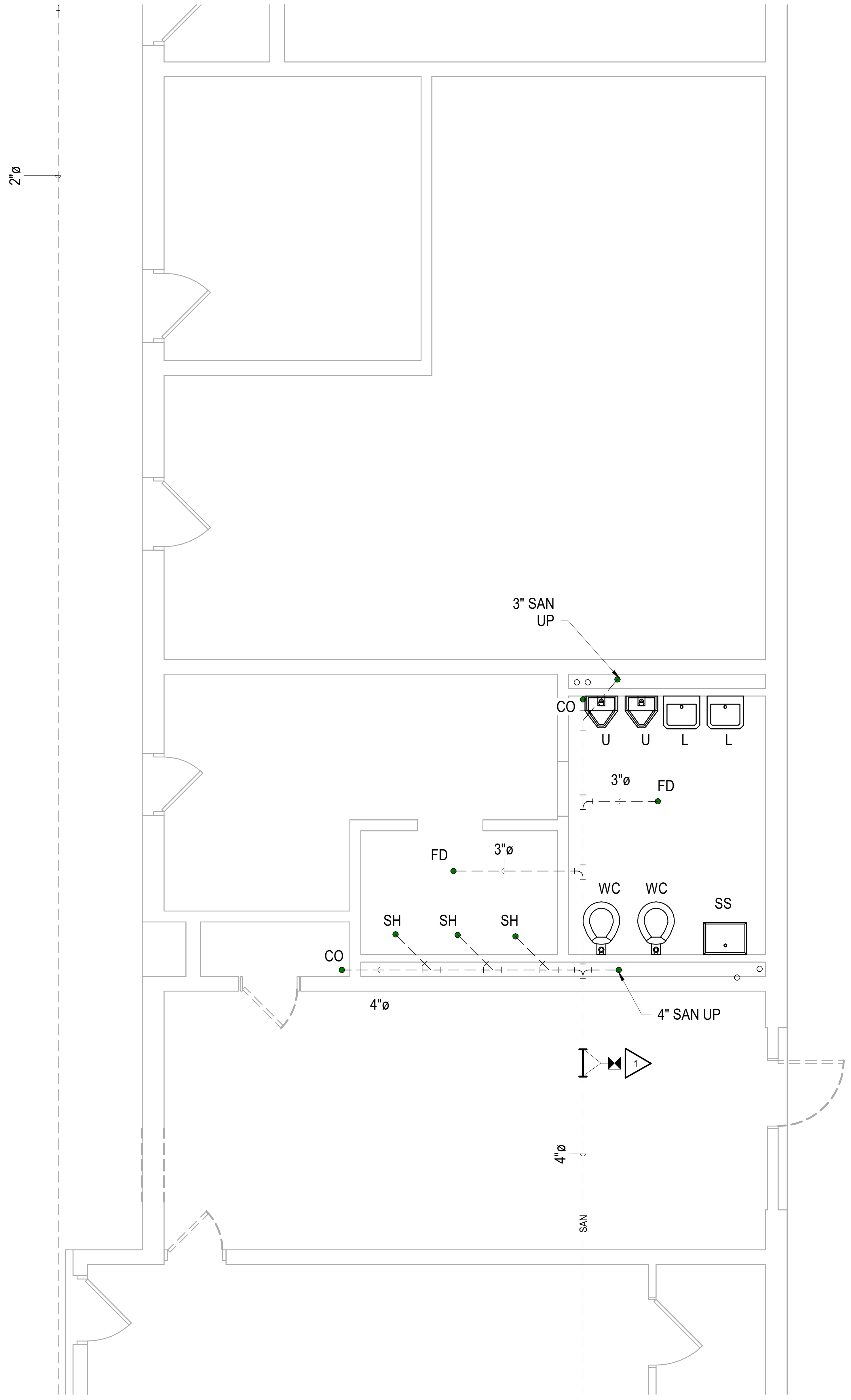

1 M5-P101 **M5 UNDERGROUND PLUMBING DEMOLITION PLAN**
1/4" = 1'-0"

N

1/22/2025 10:49:50 AM

REV	DESCRIPTION	BY	DATE

THOMAS P. OFFERLE
REGISTERED No. 10303150 STATE OF INDIANA
PROFESSIONAL ENGINEER

TOffeule

SCO ENGINEERING, LLC
SOLUTIONS PROVIDED • PROBLEMS SOLVED
FORT WAYNE
6534 Constitution Drive
Fort Wayne, IN 46804
(260) 436-9213
(260) 432-5481 fax
scofw@sco-llc.com

JONES PETRIE RAFINSKI
South Bend, IN
p: 574.232.4388
Fort Wayne, IN
p: 260.422.2522

TOLL ROAD MAINTENANCE BARN
M-2: 4504 N. FAIL RD LA PORTE, IN 46350
M-4: 7200 N. 600 W SHIPSHEWANA, IN 46565
M-5: 7565 N. 650 W ORLAND, IN 46776

ITRCC
3200 CASSOPOLIS STREET ELKHART, IN 46514

M5 PLUMBING DEMOLITION PLANS

DESIGNED BY:
Designer

REVIEWED BY:
Checker

DRAWN BY:
Author

DATE: 1/23/2025
BID SET

JOB NUMBER: 2024-01323

SCALE:
As indicated

M5-P101

PLUMBING PLAN NOTES

① TIE INTO EXISTING UNDERGROUND SANITARY PIPING AND ROUTE AS INDICATED SAWCUT, PATCH, AND REPAIR FLOOR TO MATCH SURROUNDING CONDITIONS. REFER TO ARCHITECTURAL PLANS FOR ADDITIONAL INFORMATION.

② TIE INTO EXISTING DOMESTIC WATER PIPING AND ROUTE AS INDICATED.

③ PROVIDE AND INSTALL NEW ELECTRIC WATER HEATER COMPLETE, INCLUDING TMV, VALVES, AND SPECIALTIES. PROVIDE AND INSTALL ON SUPPORT STAND. REFER TO ELECTRIC WATER HEATER DETAIL FOR ADDITONAL INFORMATION.

④ ROUTE 3/4" HW, 3/4" CW, AND 2" VENT PIPING DOWN WITHIN WALL FOR FINAL CONNECTION TO NEW PLUMBING FIXTURE. REFER TO PLUMBING FIXTURE SCHEDULE FOR ADDITIONAL INFORMATION.

⑤ ROUTE 3/4" CW AND 2" VENT PIPING DOWN WITHIN WALL FOR FINAL CONNECTION TO NEW PLUMBING FIXTURE. REFER TO PLUMBING FIXTURE SCHEDULE FOR ADDITIONAL INFORMATION.

⑥ SAWCUT EXISTING WALL FOR ACCESS TO EXISTING 4" VENT THRU ROOF TIE NEW 3" VENT PIPING INTO EXISTING 4" VENT THRU ROOF. PATCH AND REPAIR WALL TO MATCH SURROUNDING CONDITIONS.

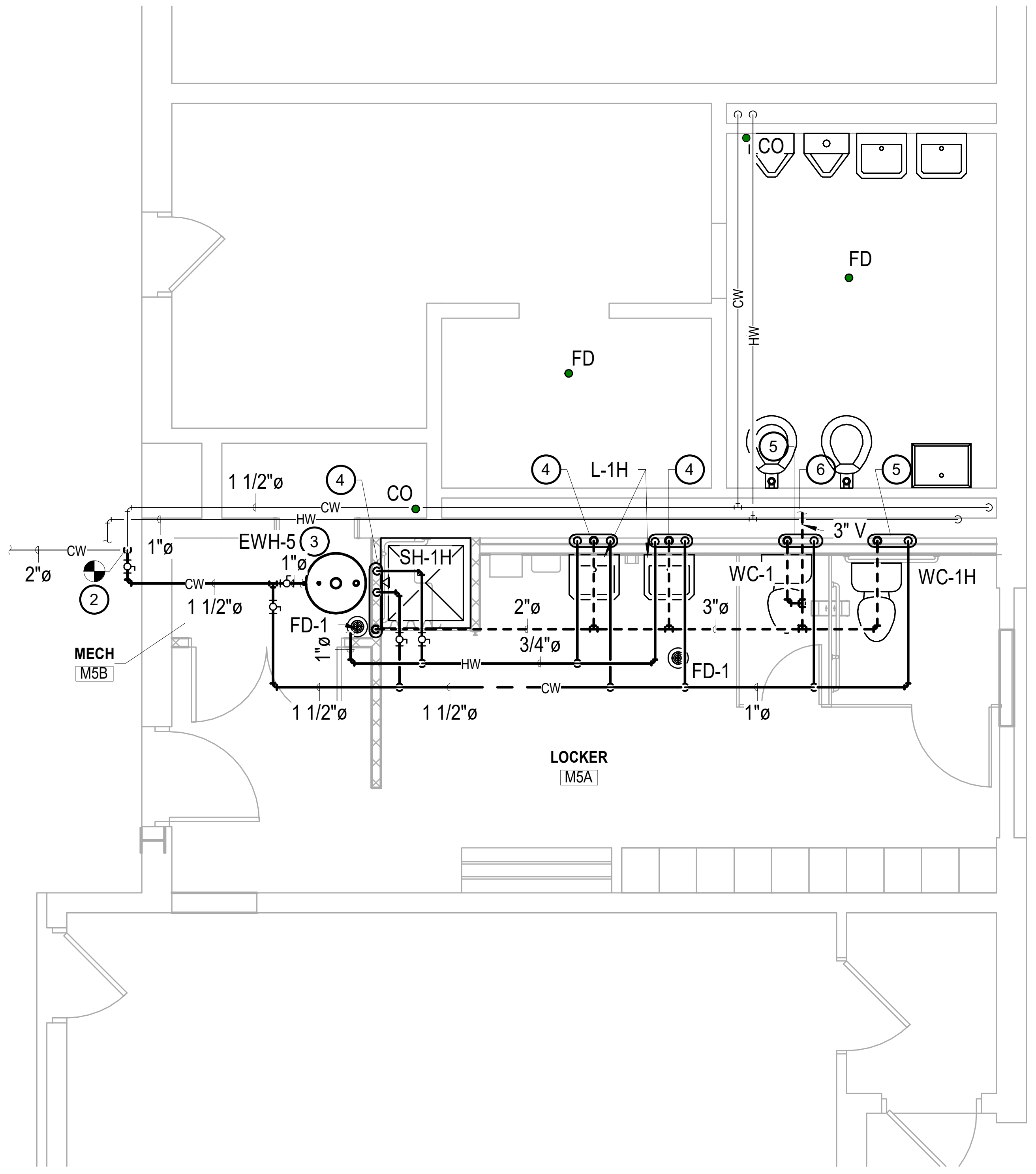

CW
HW
FD
FD
CO
1 1/2"ø
④
CO
④
L-1H
④
⑤
⑥
⑤
3" V
EWH-5 ③
1"ø
2"ø
②
1"ø
SH-1H
WC-1
WC-1H
1 1/2"ø
FD-1
2"ø
3"ø
3/4"ø
1"ø
FD-1
MECH
M5B
1 1/2"ø
1 1/2"ø
1"ø
LOCKER
M5A

2 M5 PLUMBING PLAN
M5-P201 1/4" = 1'-0"

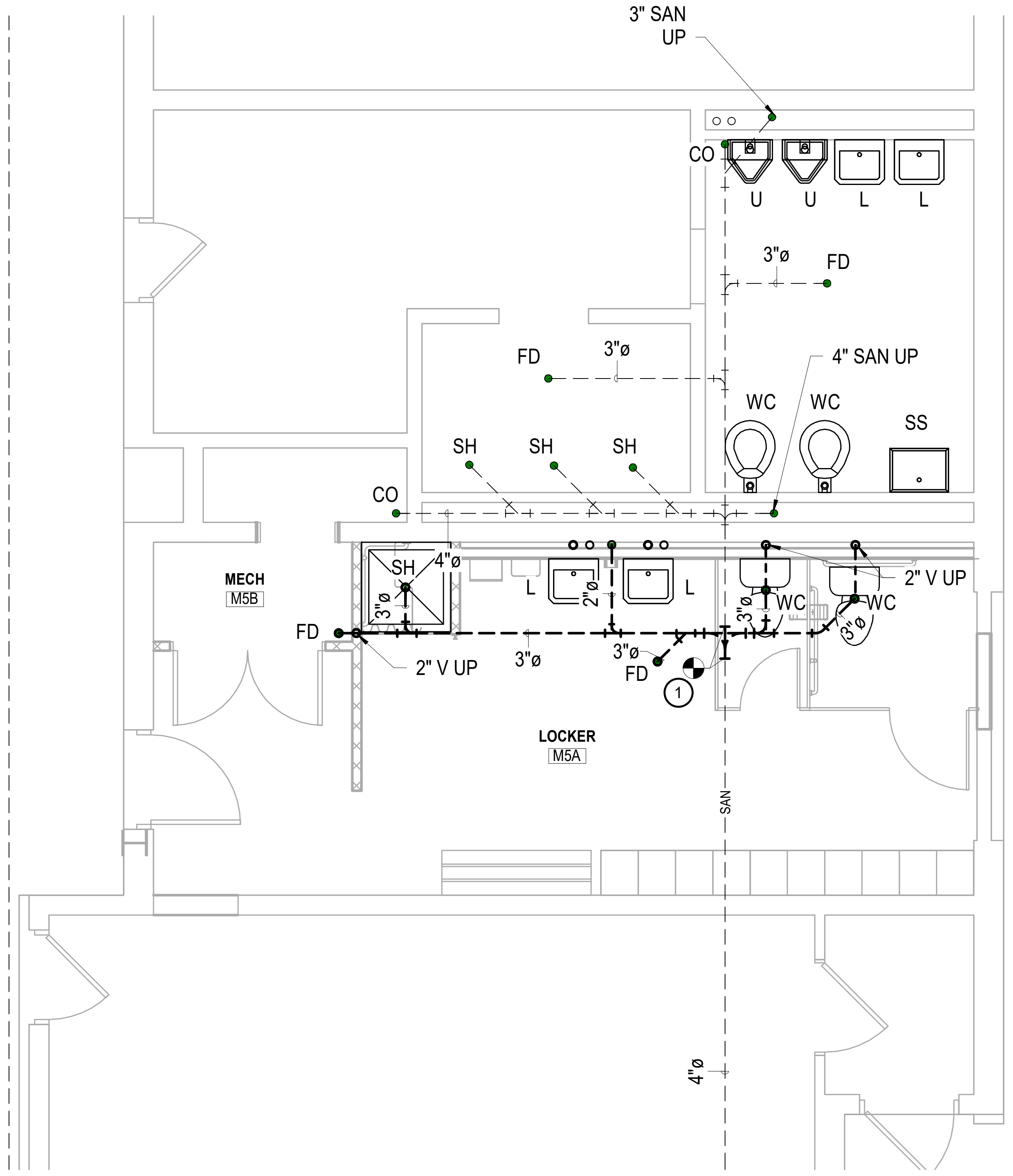

3" SAN
UP
CO
U
U
L
L
3"ø
FD
FD
3"ø
4" SAN UP
WC
WC
SS
SH
SH
SH
CO
MECH
M5B
SH
4"ø
L
L
2"ø
3"ø
WC
WC
2" V UP
FD
2" V UP
3"ø
3"ø
3"ø
3"ø
FD
①
LOCKER
M5A
SAN
4"ø

1 M5 UNDERGROUND PLUMBING PLAN
M5-P201 1/4" = 1'-0"

1/22/2025 10:49:50 AM

REV	DESCRIPTION	BY	DATE

THOMAS P. OFFERLE
REGISTERED
No.
10303150
STATE OF
INDIANA
PROFESSIONAL ENGINEER

TOffeerle

SCO ENGINEERING, LLC
SOLUTIONS PROVIDED • PROBLEMS SOLVED
FORT WAYNE
6534 Constitution Drive
Fort Wayne, IN 46804
(260) 436-9213
(260) 432-5481 fax
scofw@sco-llc.com

JONES
PETRIE
RAFINSKI
South Bend, IN
p: 574.232.4388
Fort Wayne, IN
p: 260.422.2522

TOLL ROAD MAINTENANCE BARN
M-2: 4504 N. FAIL RD LA PORTE, IN 46350
M-4: 7200 N. 600 W SHIPSHEWANA, IN 46565
M-5: 7565 N. 650 W ORLAND, IN 46776

ITRCC
3200 CASSOPOLIS STREET
ELKHART, IN 46514

M5 PLUMBING PLANS

DESIGNED BY:	Designer
REVIEWED BY:	Checker
DRAWN BY:	Author
DATE:	1/23/2025 BID SET
JOB NUMBER:	2024-01323
SCALE:	As indicated

M5-P201

GAS WATER HEATER SCHEDULE

TAG	MANUFACTURER	MODEL	RECOVERY 100 DEG RISE (GPH)	BTU INPUT	STORAGE (GAL)	EFFICIENCY (MINIMUM)	ELEC. (V / PH)	REMARKS
GWH-2	LOCHINVAR	SWR285N	328	285,000	110	96	120/1	1, 2, 3, 4

REMARKS:
1. PROVIDE UNIT WITH ASME TEMPERATURE AND PRESSURE RELIEF VALVE SIZED FOR HEATER.
2. SET TO MAINTAIN 140 DEGREES F.
3. PROVIDE AND INSTALL WITH WATER HEATER BASE PAD.
4. PROVIDE WITH EXPANSION TANK EQUAL TO AMTROL THERM-X-TROL MODEL ST-12-C WITH 3.2 GAL ACCEPTANCE VOLUME.

ELECTRIC WATER HEATER SCHEDULE

TAG	MANUFACTURE	MODEL	ELEMENT (KW)	GALLON CAPACITY	90 DEG. RISE RECOVERY GPH	ELECTRICAL (V / PH)	REMARKS
EWH-4	LOCHINVAR	ETT030KD	4500 (X2)	30	47	208 /1 /60	1, 2, 3
EWH-5	LOCHINVAR	ETT030KD	4500 (X2)	30	47	208 /1 /60	1, 2, 3

REMARKS:
1. PROVIDE WITH ASME TEMPERATURE AND PRESSURE RELIEF VALVE SIZED FOR HEATER.
2. WATER HEATER IS TO BE DUAL ELEMENT AND FIELD WIRED FOR SIMULTANEOUS OPERATION
3. PROVIDE AND INSTALL WITH SUPPORT STAND.

TEMPERATURE MIXING VALVE SCHEDULE

TAG	MANUFACTURER	MODEL	UNIT NUMBER	MIN. / MAX FLOW (GPM)	DESIGN FLOW (GPM)	DESIGN PRESS. DROP (PSI)	OUTLET TEMP. (DEG. F)	SERVICE	REMARKS
TMV-2	LAWLER	802	86008	1 / 39	22	10	110	110°F DOMESTIC HOT WATER	1, 2, 3, 4
TMV-4	LAWLER	801	86208	1 / 25	13	10	110	110°F DOMESTIC HOT WATER	1, 2, 3, 4
TMV-5	LAWLER	801	86208	1 / 25	13	10	110	110°F DOMESTIC HOT WATER	1, 2, 3, 4

REMARKS:
1. PROVIDE AND INSTALL UNIT WITH CHECK VALVES ON HOT AND COLD WATER SUPPLY, INTEGRAL OUTLET THERMOMETER AND SHUT-OFF VALVE ON TEMPERED WATER OUTLET.
2. PROVIDE AND INSTALL AN EXPOSED ASSEMBLY WITH ROUGH BRASS FINISH.
3. VALVE SHALL FAIL TO THE COLD SUPPLY.
4. UNIT SHALL BE ASSE 1017 COMPLIANT.

PLUMBING FIXTURE SCHEDULE

FIXTURE	MFGR	FIXTURE MODEL	TRIM			PIPE CONNECTIONS				COLOR	REMARKS
			MFGR	MODEL	TYPE	W	V	HW	CW		
WC-1	AMERICAN STANDARD	2462.016	---	---	TANK TYPE	3"	2"	--	1"	WHITE	1, 2
WC-1H	AMERICAN STANDARD	2467.016	---	---	TANK TYPE	3"	2"	--	1"	WHITE	1, 2
L-1H	AMERICAN STANDARD	0355.012	CHICAGO	802-VE2805-317ABCP	LEVER HANDLE	1 1/2"	1 1/2"	1/2"	1/2"	WHITE	3, 4, 5, 6
SH-1H	BRADLEY	WS-1X-HN-EF-B	---	---	LEVER HANDLE	2"	1 1/2"	1/2"	1/2"	STAINLESS	12, 13, 14, 15, 16
CO-1	JOSAM	55000-1-22	----	----	----	----	----	----	----	----	7, 8
FD-1	JOSAM	30000-A	----	----	----	----	----	----	----	----	9, 10, 11

REMARKS:
1 PROVIDE HEAVY DUTY ELONGATED WHITE OPEN FRONT PLASTIC SEAT WITH CHECK HINGE KOHLER MODEL K-4666-C OR EQUIVALENT.
2 INSTALL TRIP LEVER ON THE WIDE SIDE OF THE STALL.
3 PROVIDE AND INSTALL WITH 17 GAUGE P-TRAP WITH INTEGRAL CLEANOUT, ANGLE STOPS WITH LOOSE KEY HANDLES, AND VANDAL PROOF GRID STRAINER.
4 PROVIDE AND INSTALL UNIT WITH PIPE WRAP KIT EQUAL TO TRUBRO OR PLUMBEREX PRO.
5 PROVIDE AND INSTALL JOSAM SERIES 17000 SERIES FLOOR MOUNTED CONCEALED ARM CARRIER
6 MOUNT RIM AT 29" A.F.F. TO BOTTOM OF APRON.
7 CLEANOUTS SHALL BE SIZED PER PLANS.
8 PROVIDE AND INSTALL UNIT FOR FINISHED FLOOR, ROUND TOP.
9 FLOOR DRAINS SHALL BE SIZED PER PLANS.
10 PROVIDE AND INSTALL UNIT WITH DEEP SEAL TRAP.
11 PROVIDE AND INSTALL UNIT WITH SURE SEAL, INLINE FLOOR DRAIN TRAP SEAL.
12 PROVIDE AND INSTALL WITH ALL METAL CONSTRUCTION 1.75 GPM HANDHELD SHOWER HEAD LIKE HAMMERHEAD.
13 MOUNT HEAD AT 72" A.F.F.
14 PROVIDE WITH PRESSURE BALANCING MIXING VALVE WITH SCREW DRIVER SERVICE STOPS.
15 MOUNT 72" A.F.F. TO TOP OF SLIDE BAR.
16 PROVIDE AND INSTALL WITH WALL/HAND SHOWER WITH FLEXIBLE 5? METAL HOSE.

WATER HAMMER ARRESTOR SCHEDULE

MARK	MANUFACTURE	MODEL #	MAX. FIXTURE UNIT CAPACITY	CONNECTION SIZE	REMARKS
A	SIOUX CHIEF	652-A	1 TO 11	1/2"	1
B	SIOUX CHIEF	653-B	12 TO 32	3/4"	1
C	SIOUX CHIEF	654-C	33 TO 60	1"	1
D	SIOUX CHIEF	655-D	61 TO 113	1 1/4"	1
E	SIOUX CHIEF	656-E	114 TO 154	1 1/2"	1
F	SIOUX CHIEF	657-F	155 TO 330	2"	1

1. PLUMBING CONTRACTOR SHALL INSTALL SHOCK ABSORBER AT EACH WATER LINE SERVING A BANK OF PLUMBING FIXTURES, DOWNSTREAM OF MAIN SHUT-OFF VALVE PER ABOVE SCHEDULE OR AS SHOWN ON DESIGN DRAWINGS. INSTALL AS PER STANDARD PDI-WH 201.

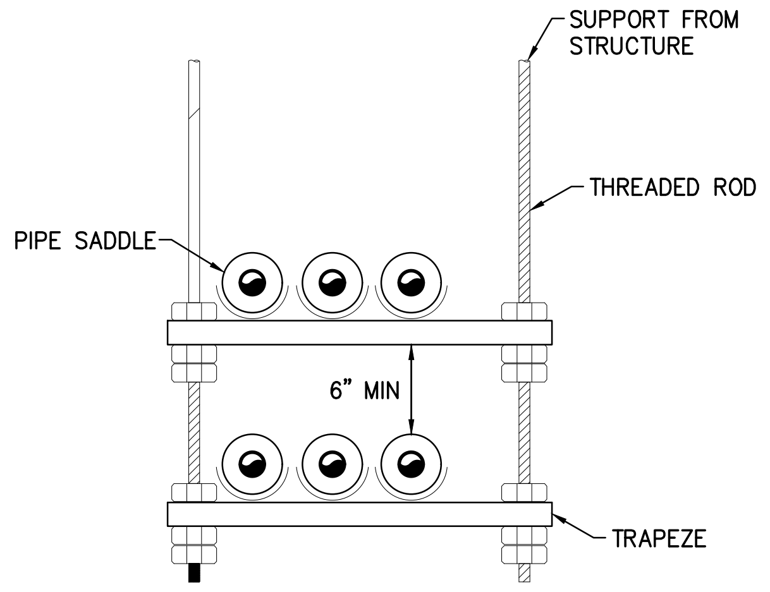
SUPPORT FROM STRUCTURE
THREADED ROD
PIPE SADDLE
6" MIN
TRAPEZE

4 PIPE SUPPORT DETAIL
NOT TO SCALE

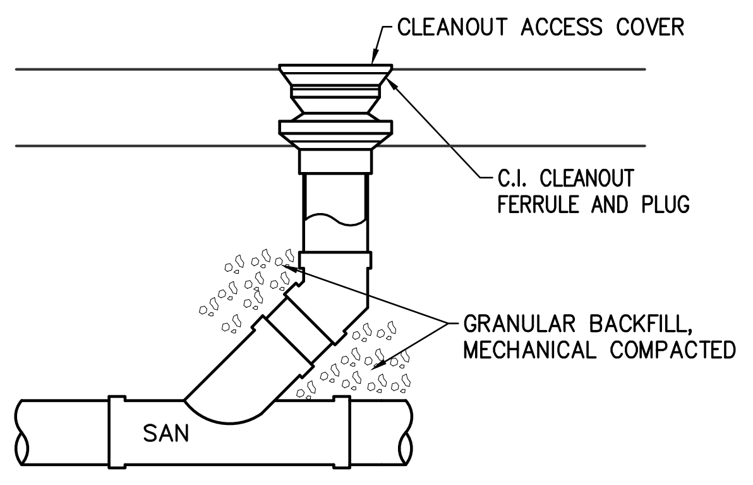
CLEANOUT ACCESS COVER
C.I. CLEANOUT FERRULE AND PLUG
GRANULAR BACKFILL, MECHANICAL COMPACTED
SAN

3 INTERIOR CLEANOUT DETAIL
NOT TO SCALE

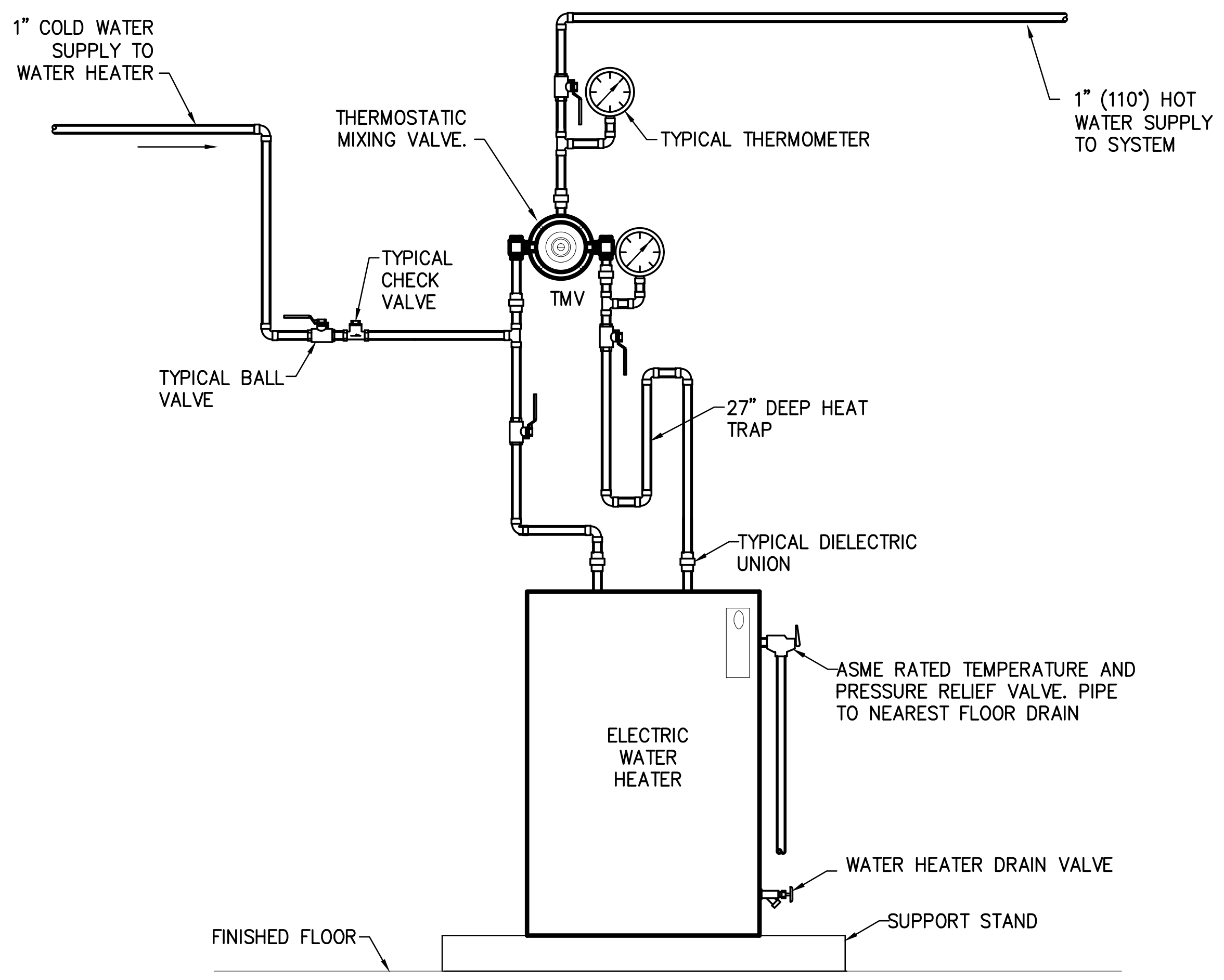
1" COLD WATER SUPPLY TO WATER HEATER
THERMOSTATIC MIXING VALVE.
TYPICAL THERMOMETER
1" (110°) HOT WATER SUPPLY TO SYSTEM
TYPICAL CHECK VALVE
TMV
TYPICAL BALL VALVE
27" DEEP HEAT TRAP
TYPICAL DIELECTRIC UNION
ELECTRIC WATER HEATER
ASME RATED TEMPERATURE AND PRESSURE RELIEF VALVE. PIPE TO NEAREST FLOOR DRAIN
WATER HEATER DRAIN VALVE
SUPPORT STAND
FINISHED FLOOR

2 M4 & M5 - WATER HEATER DETAIL
NOT TO SCALE

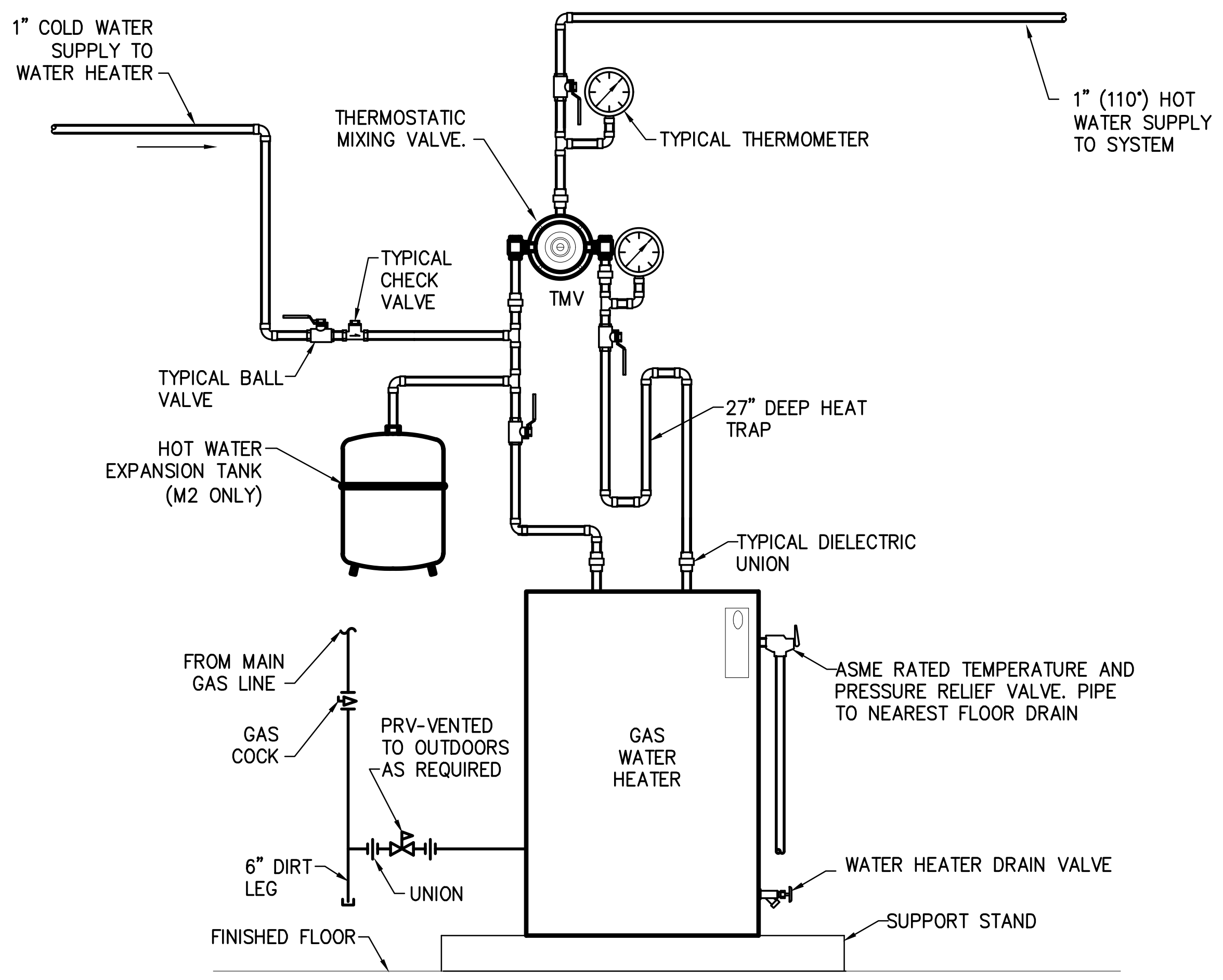
1" COLD WATER SUPPLY TO WATER HEATER
THERMOSTATIC MIXING VALVE.
TYPICAL THERMOMETER
1" (110°) HOT WATER SUPPLY TO SYSTEM
TYPICAL CHECK VALVE
TMV
TYPICAL BALL VALVE
27" DEEP HEAT TRAP
HOT WATER EXPANSION TANK (M2 ONLY)
TYPICAL DIELECTRIC UNION
FROM MAIN GAS LINE
GAS COCK
PRV-VENTED TO OUTDOORS AS REQUIRED
GAS WATER HEATER
ASME RATED TEMPERATURE AND PRESSURE RELIEF VALVE. PIPE TO NEAREST FLOOR DRAIN
6" DIRT LEG
UNION
WATER HEATER DRAIN VALVE
SUPPORT STAND
FINISHED FLOOR

1 M2 - WATER HEATER DETAIL
NOT TO SCALE

REV	DESCRIPTION	BY	DATE

THOMAS P. OFFERLE
REGISTERED No. 10303150 STATE OF INDIANA
PROFESSIONAL ENGINEER

TOffurle

SCO ENGINEERING, LLC
SOLUTIONS PROVIDED • PROBLEMS SOLVED
FORT WAYNE
6534 Constitution Drive
Fort Wayne, IN 46804
(260) 436-9213
(260) 432-5481 fax
scofw@sco-llc.com

JONES
PETRIE
RAFINSKI
Fort Wayne, IN
p: 260.422.2522
South Bend, IN
p: 574.232.4388

TOLL ROAD MAINTENANCE BARN
4504 N. FAIL RD
7200 N. 600 W
7565 N. 650 W
LA PORTE, IN 46350
SHIPSHEWANA, IN 46565
ORLAND, IN 46776

ITRCC
3200 CASSOPOLIS STREET
ELKHART, IN 46514

M2, M4, M5 PLUMBING DETAILS AND SCHEDULES

DESIGNED BY:

REVIEWED BY:

DRAWN BY:

DATE: 1/23/2025
BID SET

JOB NUMBER: 2024-01323

SCALE:
As indicated

M2, M4, M5 -P501

MECHANICAL SPECIFICATIONS

BASIC MECHANICAL REQUIREMENTS

PART 1 - GENERAL

1.01 RELATED DOCUMENTS

A. ALL WORK SHALL COMPLY WITH ALL STATE, LOCAL, AND NATIONAL CODES.

B. ALL MATERIALS, EQUIPMENT, AND INSTALLATIONS SHALL MEET OR EXCEED THE REQUIREMENTS OF THE STATE ENERGY CODE (ASHRAE STANDARD 90.1 2007).

C. ALL MATERIAL AND EQUIPMENT SHALL BE NEW. EQUIPMENT, MATERIAL, AND WORKMANSHIP SHALL BE WARRANTED FOR ONE YEAR MINIMUM FROM THE DATE OF SUBSTANTIAL COMPLETION.

D. CONTRACTOR SHALL COORDINATE ALL ASPECTS OF WORK WITH OTHER TRADES PRIOR TO AND DURING CONSTRUCTION AND INSTALLATIONS.

E. WHEN A CONFLICT OCCURS BETWEEN PLANS AND NOTES, THE ENGINEER SHALL DETERMINE WHICH GOVERNS. GENERALLY, THE MOST RESTRICTIVE AND COSTLY ALTERNATIVE SHALL TAKE PRECEDENCE.

F. VERIFY ALL DIMENSIONS FROM ARCHITECTURAL PLANS AND OR STRUCTURAL PLANS.

G. ALL HVAC EQUIPMENT SHALL BE LISTED FOR ITS USE AND MOUNTED OR HUNG PER MANUFACTURER'S RECOMMENDATIONS AND LISTING.

H. BASIC REQUIREMENTS: REQUIREMENTS OF THE CONTRACT FORMS, CONDITIONS OF THE CONTRACT, SPECIFICATIONS, DRAWINGS, AND ADDENDA AND CONTRACT MODIFICATIONS (THE CONTRACT DOCUMENTS), APPLY TO THE REQUIREMENTS OF EACH SPECIFICATIONS SECTION.

I. THIS CONTRACTOR SHALL OBTAIN AND PAY FOR ALL PERMITS AND INSPECTIONS REQUIRED BY THE AUTHORITIES HAVING JURISDICTION.

J. CONFLICTS: NOTHING CONTAINED IN THIS SECTION SHALL BE CONSTRUED TO CONFLICT IN ANY WAY WITH OTHER PROVISIONS OR REQUIREMENTS OF THE CONTRACT DOCUMENTS. THE INTENT IS THAT THIS SECTION WILL TAKE PRECEDENCE. WHERE DIFFERENCES ARISE, THE ENGINEER SHALL DECIDE WHICH DIRECTIONS OR INSTRUCTIONS TAKE PRECEDENCE.

K. EXACT QUANTITY AND LOCATION SHALL BE DETERMINED BY THE CONTRACTOR AT THE JOB SITE. ALL MECHANICAL DEMOLITION THAT IS REQUIRED FOR THE INSTALLATION OF THE SHOWN SYSTEMS SHALL BE BY THIS CONTRACTOR.

1.02 SUMMARY

A. GENERAL: UNLESS AN ITEM IS SPECIFICALLY MENTIONED AS BEING PROVIDED BY OTHERS, THE REQUIREMENTS OF DIVISION 23 CONTRACT DOCUMENTS SHALL BE COMPLETED. THE SYSTEMS, EQUIPMENT, DEVICES AND ACCESSORIES SHALL BE INSTALLED, FINISHED, TESTED AND ADJUSTED FOR CONTINUOUS AND PROPER OPERATION. ANY APPARATUS, MATERIAL OR DEVICE NOT SHOWN ON THE DRAWINGS BUT MENTIONED IN THESE SPECIFICATIONS, OR VICE VERSA, OR ANY INCIDENTAL ACCESSORIES NECESSARY TO MAKE THE PROJECT COMPLETE AND OPERATIONAL IN ALL RESPECTS, SHALL BE FURNISHED, DELIVERED AND INSTALLED WITHOUT ADDITIONAL EXPENSE TO THE OWNER. INCLUDE ALL MATERIALS, EQUIPMENT, SUPERVISION, OPERATION, METHODS AND LABOR FOR THE FABRICATION, INSTALLATION, START-UP AND TESTS NECESSARY FOR COMPLETE AND PROPERLY FUNCTIONING SYSTEMS.

B. THIS CONTRACTOR SHALL PAY FOR ALL CUTTING AND PATCH FOR THIS WORK AS REQUIRED.

C. LOCATIONS OF ALL PIPING, DUCTWORK, FIXTURES AND EQUIPMENT ARE APPROXIMATE ONLY AND MAY BY CHANGED TO MEET STRUCTURAL CONDITIONS AS APPROVED BY ENGINEER.

1.03 APPLICABLE STANDARDS

A. CODE COMPLIANCE: AS A MINIMUM, UNLESS OTHERWISE INDICATED, COMPLY WITH ALL RULES, REGULATIONS,STANDARDS, CODES, ORDINANCES AND LAWS OF LOCAL, STATE AND FEDERAL GOVERNMENTS AND THE AMENDMENTS AND INTERPRETATION OF SUCH RULES, REGULATIONS, STANDARDS, CODES, ORDINANCES AND LAWS OF LOCAL, STATE AND FEDERAL GOVERNMENTS BY THE AUTHORITIES HAVING LAWFUL JURISDICTION.

B. ADA: COMPLY WITH THE REQUIREMENTS OF THE AMERICANS WITH DISABILITIES ACT (ADA).

C. COMPLY: WITH THE NATIONAL FIRE PROTECTION ASSOCIATION (NFPA) STANDARDS AND OTHER CODES AND STANDARDS AS ADOPTED BY THE LOCAL AUTHORITY HAVING JURISDICTION.

D. COMPLY: WITH THE NATIONAL FIRE PROTECTION ASSOCIATION (NFPA) STANDARDS AND OTHER CODES AND STANDARDS INDICATED.

1.04 SUBMITTAL

A. GENERAL: THE PROVISIONS OF THIS SECTION ARE SUPPLEMENTAL TO THE REQUIREMENTS IN DIVISION 1, AND ONLY APPLY TO THE MATERIAL AND EQUIPMENT COVERED IN THESE SPECIFICATIONS.

B. TIME: SUBMIT MANUFACTURER'S LITERATURE, PERFORMANCE DATA AND INSTALLATION INSTRUCTIONS COVERED IN EACH SECTION OF THESE SPECIFICATIONS UNDER AN INDIVIDUAL LETTER OF TRANSMITTAL WITHIN 30 DAYS AFTER NOTICE TO PROCEED UNLESS OTHERWISE INDICATED.

C. SUBMITTER'S REVIEW: ALL ITEMS REQUIRED FOR EACH SECTION SHALL BE REVIEWED BEFORE SUBMITTAL. SUBMITTAL INFORMATION FOR EACH ITEM SHALL BEAR A REVIEW STAMP OF APPROVAL, INDICATING THE NAME OF THE CONTRACTOR AND SUBCONTRACTOR (WHERE APPLICABLE), THE MATERIAL SUPPLIERS, THE INITIALS OF SUBMITTER AND DATE CHECKED. RESPONSIBILITY FOR ERRORS OR OMISSIONS IN SUBMITTALS SHALL NOT BE RELIEVED BY THE ENGINEER'S REVIEW OF
SUBMITTALS. RESPONSIBILITY FOR SUBMITTALS CANNOT BE SUBROGATED TO MATERIAL SUPPLIERS BY CONTRACTORS OR SUBCONTRACTORS.

  1. REVIEW OF THE SUBMITTAL DATA, WHETHER INDICATED WITH "RELEASED" OR "RELEASED WITH REVIEW COMMENTS" DOES NOT CONSTITUTE AUTHORIZATION FOR OR ACCEPTANCE OF A CHANGE IN THE CONTRACT PRICE.

D. ENGINEER'S REVIEW: THE SUBMITTAL DATA SHALL BE REVIEWED ONLY FOR GENERAL CONFORMANCE WITH THE DESIGN CONCEPT OF THE PROJECT AND FOR GENERAL COMPLIANCE WITH THE CONTRACT DOCUMENTS. ANY ACTION INDICATED IS SUBJECT TO THE REQUIREMENTS OF THE CONTRACT DOCUMENTS. REVIEWS OF SUBMITTAL DATA REVIEW SHALL NOT INCLUDE QUANTITIES; DIMENSIONS (WHICH SHALL BE CONFIRMED AND CORRELATED AT THE JOB SITE); FABRICATION PROCESSES; TECHNIQUES OF CONSTRUCTION; AND CO-ORDINATION OF THE SUBMITTAL DATA WITH ALL OTHER TRADES. COPIES OF THE SUBMITTAL DATA WILL BE RETURNED MARKED "REVIEWED AND RELEASED", "RELEASED AS NOTED", "REVISE AS NOTED AND RESUBMIT", "REJECTED, REVISE AS NOTED AND RESUBMIT".

E. SUBMITTAL ITEMS: SUBMITTAL ITEMS SHALL BE INSERTED IN A TECHNICAL INFORMATION BROCHURE. MARK THE APPROPRIATE SPECIFICATION SECTION OR DRAWING REFERENCE NUMBER IN THE RIGHT HAND CORNER OF EACH ITEM. ALL TYPEWRITTEN PAGES SHALL BE ON THE PRODUCT OR EQUIPMENT MANUFACTURER'S PRINTED LETTERHEAD.

  1. MANUFACTURER'S LITERATURE: WHERE INDICATED, INCLUDE THE MANUFACTURER'S PRINTED LITERATURE. LITERATURE SHALL BE CLEARLY MARKED TO INDICATE THE ITEM INTENDED FOR USE.

  2. PERFORMANCE DATA: PROVIDE PERFORMANCE DATA, WIRING AND CONTROL DIAGRAMS AND SCALE DRAWINGS WHICH SHOW THAT PROPOSED EQUIPMENT WILL FIT INTO ALLOTTED SPACE (INDICATE AREAS REQUIRED FOR SERVICE ACCESS, CONNECTIONS, ETC.), AND OTHER DATA REQUIRED FOR THE ENGINEER TO DETERMINE THAT THE EQUIPMENT COMPLIES WITH THE CONTRACT DOCUMENTS. WHERE NOTED, PERFORMANCE DATA SHALL BE CERTIFIED BY THE MANUFACTURER AT THE DESIGN RATING POINTS.

  3. INSTALLATION INSTRUCTIONS: WHERE REQUESTED, EACH PRODUCT SUBMITTAL SHALL INCLUDE THE MANUFACTURER'S INSTALLATION INSTRUCTIONS. GENERIC INSTALLATION INSTRUCTIONS ARE NOT ACCEPTABLE. INSTRUCTIONS SHALL BE THE SAME AS THOSE INCLUDED WITH THE PRODUCT WHEN IT IS SHIPPED FROM THE FACTORY.

  4. WRITTEN OPERATING INSTRUCTIONS: INSTRUCTIONS SHALL BE THE MANUFACTURER'S WRITTEN OPERATING INSTRUCTIONS FOR THE SPECIFIED PRODUCT. IF THE INSTRUCTIONS COVER MORE THAN ONE MODEL OR TYPE OF PRODUCT THEY SHALL BE CLEARLY MARKED TO IDENTIFY THE INSTRUCTIONS THAT COVER THE PRODUCT DELIVERED TO THE PROJECT. OPERATING INSTRUCTIONS SHALL BE SUBMITTED IMMEDIATELY AFTER THE PRODUCT OR EQUIPMENT SUBMITTAL HAS BEEN RETURNED FROM THE ENGINEER MARKED "REVIEWED AND RELEASED".

  5. MAINTENANCE INSTRUCTIONS: INFORMATION SHALL BE THE MANUFACTURER'S PRINTED INSTRUCTIONS AND PARTS LISTS FOR THE EQUIPMENT FURNISHED. IF THE INSTRUCTIONS COVER MORE THAN ONE MODEL OR TYPE OF EQUIPMENT THEY SHALL BE MARKED TO IDENTIFY THE INSTRUCTIONS FOR THE FURNISHED PRODUCT. SUBMIT MAINTENANCE INSTRUCTIONS IMMEDIATELY AFTER THE PRODUCT OR EQUIPMENT SUBMITTAL HAS BEEN RETURNED FROM THE ENGINEER MARKED "REVIEWED AND RELEASED".

PART 2: PRODUCTS - GENERAL

1. MANUFACTURERS:

A. SPECIFIED PRODUCTS: MANUFACTURER'S NAMES AND PRODUCT MODEL NUMBERS INDICATED ON THE DRAWINGS AND IN THESE SPECIFICATIONS ESTABLISH THE TYPE, STYLE, QUALITY, PERFORMANCE, AND SOUND RATING OF THE DESIRED PRODUCT.

B. SPACE REQUIREMENTS: ALL MANUFACTURED PRODUCTS FURNISHED ON THIS PROJECT MUST HAVE THE REQUIRED SPACE AND SERVICE AREAS INDICATED IN THE MANUFACTURER'S PRINTED LITERATURE OR SHOWN ON THEIR SHOP DRAWING. WHEN THE MANUFACTURER DOES NOT INDICATE THE SPACE REQUIRED FOR SERVICING THE EQUIPMENT, THE SPACE SHOWN ON THE DRAWINGS OR AS REQUIRED BY THE ENGINEER MUST BE PROVIDED

C. ALL HVAC EQUIPMENT SHALL BE INSTALLED, MOUNTED, HANG, ETC. PER MANUFACTURER'S RECOMMENDATIONS AND SHALL BE UL LISTED. ALL MATERIAL AND EQUIPMENT SHALL BE NEW AND WITHOUT DEFECT.

  1. MATERIAL AND EQUIPMENT:

A. GENERAL: MATERIAL AND EQUIPMENT USED SHALL BE PRODUCED BY MANUFACTURERS REGULARLY ENGAGED IN THE PRODUCTION OF SIMILAR ITEMS, AND WITH A HISTORY OF SATISFACTORY USE AS JUDGED BY THE ENGINEER.

B. THIS CONTRACTOR SHALL FURNISH AND INSTALL ALL TEMPERATURE CONTROL WIRING, THERMOSTATS, RELAYS, INTERLOCKS, ETC., AS REQUIRED.

C. COMPATIBILITY: MATERIAL AND EQUIPMENT OF ONE AND THE SAME KIND, TYPE OR CLASSIFICATION AND USED FOR IDENTICAL OR SIMILAR PURPOSES SHALL BE MADE BY THE SAME MANUFACTURER. WHERE MORE THAN ONE CHOICE IS AVAILABLE, SELECT THE OPTIONS WHICH ARE COMPATIBLE WITH OTHER PRODUCTS ALREADY SELECTED. COMPATIBILITY IS A BASIC GENERAL REQUIREMENT OF PRODUCT SELECTION.

ACCEPTABLE MANUFACTURERS FOR FURNACE/CONDENSING UNIT:
MANUFACTURERS: SUBJECT TO COMPLIANCE WITH REQUIREMENTS, PROVIDE PRODUCTS BY ONE OF THE FOLLOWING:
1) YORK.
2) CARRIER CORPORATION.
3) TRANE.
4) BRYANT HEATING & COOLING SYSTEMS.

ACCEPTABLE MANUFACTURERS FOR EXHAUST FAN UNIT:
MANUFACTURERS: SUBJECT TO COMPLIANCE WITH REQUIREMENTS, PROVIDE PRODUCTS BY ONE OF THE FOLLOWING:
1) BROAN.
2) CANARM LTD.
3) PANASONIC ECO SOLUTIONS.

ACCEPTABLE MANUFACTURERS FOR DIFFUSERS, REGISTERS, AND GRILLES:
MANUFACTURERS: SUBJECT TO COMPLIANCE WITH REQUIREMENTS, PROVIDE PRODUCTS BY ONE OF THE FOLLOWING:
1) PRICE INDUSTRIES.
2) TITUS.
3) TUTTLE & BAILEY.

TEST AND BALANCE:

2. TEST AND BALANCE AGENT IS TO PROVIDE WORK AS REQUIRED TO BALANCE ALL EXISTING AND NEW AIR SYSTEMS AS SHOWN IN THESE DOCUMENTS, OR AFFECTED BY NEW AND DEMOLITION WORK ASSOCIATED BY THIS PROJECT.

3. THIS CONTRACTOR SHALL FURNISH ALL MATERIAL AND LABOR AS REQUIRED AND AS SHOWN ON DRAWINGS TO PROVIDE A COMPLETE AIR BALANCE. PROVIDE REPORT BY A CERTIFIED (AABC OR NEEB) AIR BALANCE CONTRACTOR.

FIRE STOPPING:

WHENEVER THE CONTRACTOR COMPROMISES ANY FIRE RESISTIVE CONSTRUCTION, THEY SHALL BE REQUIRED TO REPLACE THE INTEGRITY OF THE FIRE RESISTIVE CONSTRUCTION OR ENVELOPE. THIS MAY REQUIRE A TEMPORARILY SEAL OF THE WALL PENETRATION AT THE END OF THEIR WORK DAY/SHIFT IF THE WORK IS NOT COMPLETED.

AT THE COMPLETION OF THE WORK, THE FIRE RESISTIVE CONSTRUCTION MUST BE SEALED WITH APPROVED FIRE STOPPING MATERIALS. AT THE END OF THE PROJECT THE CONTRACTOR SHALL HAVE COMPLETELY FIRE STOPPED THE WALL, FLOOR, AND CEILING PENETRATIONS AS DETAILED IN THE PUBLICATION "3M FIRE PROTECTION PRODUCTS - CENTRAL OFFICE THROUGH - PENETRATION FIRE STOPPING" AS PREPARED BY 3M CERAMIC MATERIALS DEPARTMENT; EM CENTER; ST. PAUL, MN 55144-1000 - AUTHOR: G.K. KOCH ISSUE DATE 1¾/1991. THE PENETRATION SHALL BE DETAILED IN 3M DRAWING 8000-CPC 12 (VERSION A OR B DEPENDING UPON THE FIRE RATING OF THE EXISTING WALL). CONCRETE/BRICK/BLOCK WALL PENETRATIONS SHALL BE FIRE STOPPED THE SAME AS EXCEPT THE METAL SHEETING SHALL BE ANCHORED APPROPRIATELY TO THE CONCRETE/BRICK/BLOCK.

AIR DISTRIBUTION

PART 1 - GENERAL

1.01 RELATED DOCUMENTS

A. BASIC REQUIREMENTS: PROVISIONS OF BASIC MECHANICAL REQUIREMENTS ARE A PART OF THIS SECTION.

1.02 SUMMARY

A. GENERAL: PROVIDE AIR DISTRIBUTION DEVICES AS INDICATED.

PART 2 - PRODUCTS

2.01 GENERAL

A. DEVICES: PROVIDE AIR DISTRIBUTION DEVICES AS INDICATED. ALL AIR DISTRIBUTION DEVICES PROVIDED SHALL BE THE PRODUCT OF A SINGLE MANUFACTURER UNLESS SPECIFICALLY INDICATED OTHERWISE.

B. ACOUSTICAL: NOISE PRODUCED AT EACH DIFFUSER, REGISTER, GRILLE OR OTHER AIR DISTRIBUTION DEVICE SHALL NOT EXCEED A NOISE CRITERIA LEVEL OF NC 35 BASED ON SOUND PRESSURE LEVELS IN DB RE 20 MICROPASCALS UNLESS OTHERWISE INDICATED. COORDINATE AIR DISTRIBUTION DEVICES, SOUND ATTENUATION MEASURES AND EQUIPMENT PROVIDED TO INSURE THAT THE DESIGN ACOUSTICAL CONSTRAINTS ARE NOT EXCEEDED BY THE SYSTEM, ASSUMING A ROOM ABSORPTION OF 10 DB RE 1 PW.

C. PRESSURE DROP: PRESSURE DROP ACROSS ANY AIR DISTRIBUTION DEVICE SHALL NOT EXCEED 0.10 INCHES OF WATER GAUGE TOTAL PRESSURE UNLESS OTHERWISE INDICATED.

D. MATERIAL: ALL DEVICES SHALL BE CONSTRUCTED OF EXTRUDED ALUMINUM UNLESS OTHERWISE INDICATED. AIR DISTRIBUTION DEVICES INSTALLED IN FIRE RATED CEILING, FLOOR/CEILING ASSEMBLY, OR RATED WALL SHALL BE CONSTRUCTED OF STEEL. DEVICES INSTALLED ON HARD SURFACES (DRYWALL OR PLASTER CEILINGS OR WALLS) SHALL HAVE A NEOPRENE GASKET ALONG EACH EDGE TO PROVIDE AN AIRTIGHT SEAL.

E. FINISH: EACH AIR DISTRIBUTION DEVICE SHALL HAVE A FACTORY APPLIED BAKED ENAMEL FINISH. CEILING DEVICES SHALL BE FINISHED IN WHITE AND SIDEWALL DEVICES SHALL BE FINISHED IN ALUMINUM UNLESS OTHERWISE INDICATED.

F. INTEGRAL COMPONENTS: ALL DAMPERS (AS REQUIRED BY DRAWINGS), BLANK-OFF BAFFLES AND OTHER COMPANION DEVICES WHICH FORM AN INTEGRAL PART OF AN AIR DISTRIBUTION DEVICE SHALL BE FACTORY-MADE.

G. MOUNTING SCREWS: MOUNTING SCREWS WHICH ARE VISIBLE ON THE FACE OF GRILLES, DIFFUSERS OR REGISTERS SHALL BE FURNISHED WITH THE DEVICE AND SHALL BE FINISHED AT THE FACTORY TO MATCH THE FINISH ON THE DEVICE ON WHICH THEY ARE USED.

DUCTWORK

PART 1 - GENERAL

1.01 RELATED DOCUMENTS
A. BASIC REQUIREMENTS: PROVISIONS OF SECTION 15010, BASIC MECHANICAL REQUIREMENTS ARE A PART OF THIS SECTION.

1.02 SUMMARY
A. GENERAL: PROVIDE COMPLETE DUCT SYSTEMS AS INDICATED.

B. ALL SHEET METAL DUCTWORK AND VENTS SHALL BE AIR TIGHT AND ALL SEAMS SEALED AND ALL CONSTRUCTION AND INSTALLATION SHALL BE IN ACCORDANCE WITH CURRENT EDITIONS OF SMACNA. SEAL ALL TRANSVERSE AND LONGITUDINAL SEAMS.

C. ALL 90 DEGREE RECTANGULAR ELBOWS, 2-INCH PRESSURE CLASS AND BELOW, SHALL BE EQUIPPED WITH SINGLE THICKNESS TURNING VANES MOUNTED TO A PREFABRICATED VANE RAIL.

D. PROVIDE MANUAL, SINGLE BLADE, BALANCING DAMPERS WITH LOCKING QUADRANT AND INTEGRAL POSITION INDICATOR ON ALL RUNOUTS TO SUPPLY AND EXHAUST AIR DEVICES.

E. ALL RECTANGULAR DUCTWORK SHALL BE LINED WITH 1-INCH DUCT LINER. PIN AND GLUE PER MANUFACTURER'S RECOMMENDATION. DUCT DIMENSIONS ARE "FREE AREA" AND SHALL NOT BE REDUCED. ROUND DUCT SHALL BE WRAPPED WITH 2-INCH INSULATION.

F. WHERE THE SPACE ABOVE THE CEILING IS BEING USED AS A RETURN AIR PLENUM, THE CONTRACTOR SHALL ENSURE THAT THE ELECTRICAL WIRING AND CABLES ARE PLENUM RATED, ALL PVC OR PLASTIC PIPES AND CABLES ARE CONCEALED FROM THE AIRSTREAM, AND THAT NO COMBUSTIBLES ARE LOCATED WITHIN PLENUM.

G. SHEET METAL ELBOWS SHALL NOT HAVE A RADIUS OF LESS THAN 1-1/2 TIMES THE WIDTH OF THE DUCT.

1.03 APPLICABLE STANDARDS

A. SMACNA: USE MATERIAL, WEIGHT, THICKNESS, GAUGE, REINFORCING, SEAMS AND JOINTS, SUSPENSION, WORKMANSHIP AND CONSTRUCTION AND INSTALLATION METHODS AS OUTLINED IN THE SHEET METAL AND AIR CONDITIONING CONTRACTORS NATIONAL ASSOCIATION, INC., HVAC DUCT CONSTRUCTION STANDARDS, METAL & FLEXIBLE SECOND EDITION WITH ADDENDUM, 1997. MANUFACTURED ROUND OR OVAL DUCTWORK SHALL COMPLY WITH THE MANUFACTURER'S PUBLISHED RECOMMENDATIONS ANDINSTALLATION INSTRUCTIONS.
B. COMPLY: WITH THE NATIONAL FIRE PROTECTION ASSOCIATION (NFPA) STANDARDS AND OTHER CODES AND STANDARDS AS ADOPTED BY THE LOCAL AUTHORITY HAVING JURISDICTION.
C. NFPA: THE DUCT SYSTEM, FITTINGS, SEALANTS AND ACCESSORIES SHALL COMPLY TO NFPA 90A REQUIRING A FLAME SPREAD RATING OF NOT OVER 25 AND A SMOKE DEVELOPED/FUEL CONTRIBUTED RATING NO HIGHER THAN 50.
D. UNDERWRITERS' LABORATORIES RATING: ALL FLEXIBLE FIBERGLASS DUCT SHALL BE LISTED CLASS 1 BY THE UL-181 STANDARDS RATING.

HVAC EQUIPMENT

1. PRODUCTS
A. FURNISH AND INSTALL EQUIPMENT AS SPECIFIED IN THE VARIOUS EQUIPMENT SCHEDULES.

EXISTING UTILITIES

THE CONTRACTOR SHALL ASSUME ALL RESPONSIBILITIES FOR ALL EXISTING GAS, STORM, AND SANITARY SEWER LINES WITHIN HIS SITE LIMITS.

BEFORE WORKING WITH OR AROUND THE EXISTING UTILITIES, ANY APPLICABLE UTILITY SHALL BE CONTACTED.

ALL EXISTING UTILITIES ENCOUNTERED DURING CONSTRUCTION SHALL BE THE CONTRACTORS RESPONSIBILITY TO MAINTAIN IN SERVICE. ANY UTILITY THAT CAN BE REMOVED WITHOUT UNDUE INTERRUPTION OF SERVICE MAY BE REMOVED AND REPLACED BY THE CONTRACTOR WITH PERMISSION OF THE OWNER AND THE UTILITY.

THE CONTRACTOR SHALL FAMILIARIZE HIMSELF WITH THE AREA AND NO EXTRA COMPENSATION CONNECTED WITH THE UTILITIES WILL BE ALLOWED.

MECHANICAL DEMOLITION SYMBOL SCHEDULE

— — — —	LINETYPE AND WEIGHT DESIGNATES MECHANICAL EQUIPMENT, DUCTWORK, PIPING, ETC. TO BE REMOVED.
———	LINETYPE AND WEIGHT DESIGNATES MECHANICAL EQUIPMENT, DUCTWORK, PIPING, ETC. TO REMAIN.
☒	EXTENT OF DEMOLITION.

GENERAL MECHANICAL DEMOLITION NOTES

CONTRACTOR SHALL DISPOSE OF ALL REMOVED EQUIPMENT, PIPING, DUCTWORK, ETC. UNLESS NOTED OTHERWISE.

REMOVE ALL HANGERS, UNISTRUT, BRACING AND ALL OTHER SUPPORT OR HANGING DEVICES ASSOCIATED WITH EQUIPMENT BEING SERVED.

CUT AND PATCH ALL EXISTING TO REMAIN SURFACES AFFECTED BY THIS DEMOLITION. IF NEW FINISHES ARE NOT INCLUDED BY OTHERS ON THIS PROJECT, THEN THIS CONTRACTOR SHALL RESTORE ALL FINISHES TO MATCH SURROUNDING UNDAMAGED CONDITIONS.

THIS CONTRACTOR IS RESPONSIBLE FOR REMOVING AND REINSTALLING ANY EXISTING CEILING TILES AND GRID AFFECTED BY THIS WORK. REPLACE ANY TILES DAMAGED AS A RESULT OF THE ABOVE WORK. TILES SHALL MATCH SURROUNDING CONDITIONS THAT ARE NOT COVERED UNDER DEMOLITION WORK TO BE PERFORMED BY THE GENERAL CONTRACTOR.

ANY EXISTING PIPING, CONDUIT, WIRING, EQUIPMENT, ETC. THAT IS SUPPORTED FROM MATERIALS THAT ARE TO BE REMOVED SHALL BE SUPPORTED BY NEW HANGING DEVICES PROVIDED AND INSTALLED BY THIS CONTRACTOR.

CAP EXISTING WASTE, VENT, AND WATER PIPING IN CONCEALED LOCATIONS IN WALLS TO REMAIN. ABOVE CEILING, OR BELOW SLABS FOR ALL FIXTURES AND EQUIPMENT TO BE REMOVED OR RELOCATED, FIELD VERIFY EXACT LOCATION OF EXISTING PIPING.

THESE DRAWINGS ARE A REASONABLE INDICATION OF THE EXISTING PIPING, DUCTWORK, AND EQUIPMENT CONDITIONS. CONTRACTOR SHALL FIELD VERIFY EXACT LOCATIONS AS REQUIRED.

OWNER SHALL RETAIN THE FIRST RIGHT OF REFUSAL FOR ALL PRODUCTS TO BE REMOVED.

MECHANICAL HVAC SYMBOL SCHEDULE

⊕	TIE-IN
—┘	MANUAL AIR BALANCING DAMPER
▯▯▯▯	FLEXIBLE DUCT
Ⓣ	THERMOSTAT
☒	DIFFUSER
⧄	EXHAUST OR RETURN GRILLE
═	DUCT WORK (UNLINED)

———	EXISTING MECHANICAL EQUIPMENT AND DUCTWORK TO REMAIN
━━━	NEW MECHANICAL DUCTWORK
━━━	NEW MECHANICAL EQUIPMENT
ACCU-	AIR COOLED CONDENSING UNIT
D-	DIFFUSER
EF-	EXHAUST FAN
EG-	EXHAUST GRILLE
RC-	ROOF CAP
RG-	RETURN AIR GRILLE
F-	FURNACE UNIT
A.F.F.	ABOVE FINISHED FLOOR
XX"xXX"ø	FLAT OVAL DUCT
XX"xXX"	RECTANGULAR DUCT
X"ø	ROUND DUCT

GENERAL MECHANICAL NOTES

COORDINATE ALL WORK WITH OTHER TRADES AS REQUIRED.

EQUIPMENT, PIPING, AND DUCTWORK LAYOUTS ARE SCHEMATIC IN NATURE. CONTRACTOR MUST ADJUST TO FIELD CONDITIONS AND COORDINATE WITH OTHER TRADES DURING CONSTRUCTION BY ADDING OFFSETS AND ELBOWS WHERE REQUIRED.

PRIOR TO INSTALLATION THE ENGINEER SHALL APPROVE ALL PROPOSED MODIFICATIONS TO DUCTWORK LAYOUT AND DESIGN.

ALL SUPPLY AIR DUCTWORK (OTHER THAN THAT SHOWN TO BE LINED) SHALL BE INSULATED (WRAPPED) PER SPECIFICATIONS.

ALL MATERIALS INSTALLED WITHIN PLENUM SHALL HAVE A FLAME SPREAD RATING OF NOT MORE THAN 25, SMOKE DEVELOPED RATING NOT EXCEEDING 50 IN ACCORDANCE WITH STATE CODES.

COORDINATE EXACT LOCATION OF CEILING DIFFUSERS AND GRILLES WITH LIGHTS AND ARCHITECTURAL CEILING PLAN.

FLEXIBLE DUCT SHALL BE USED WHERE INDICATED, FOR STRAIGHT LINE SEGMENTS NOT EXCEEDING 6 FEET WHEN CONNECTING DIFFUSERS TO RIGID DUCTWORK ABOVE A REMOVABLE CEILING. USE RIGID METAL ELBOWS FOR CHANGES IN DIRECTION.

THIS CONTRACTOR SHALL PROVIDE ALL EQUIPMENT, MATERIAL, AND LABOR REQUIRED FOR CORE DRILLING AS REQUIRED FOR INSTALLATION OF MATERIAL PENETRATING BUILDING CONSTRUCTION.

REFERENCE ARCHITECTURAL DRAWINGS FOR ALL DIMENSIONS, TYPICAL.

ALL SIZES ON DUCTWORK ARE IN INCHES UNLESS NOTED OTHERWISE.

SHEET METAL CONTRACTOR SHALL FABRICATE ALL DUCT TAKE-OFF FITTINGS AS SHOWN ON CONTRACT DETAIL SHEET.

DUCT SIZES LISTED ARE "FREE AREA" AND SHALL NOT BE REDUCED. INCREASE DUCT SIZES AS REQUIRED TO ACCOUNT FOR LINING.

ALL EQUIPMENT AND MATERIALS SHALL BE UL LISTED AND LABELED FOR TYPE OF EQUIPMENT AND MATERIALS FOR WHICH LISTING AND LABELING IS AVAILABLE.

GENERAL CONDITIONS NOTE

ALL CONTRACTORS, BY MAKING THEIR BID, REPRESENT THAT THEY HAVE READ AND **UNDERSTAND** THE CONSTRUCTION DOCUMENTS. THE CONTRACTOR SHALL REFER TO THE ENTIRE CONSTRUCTION DOCUMENT SET FOR GUIDANCE ON DIMENSIONS, HEIGHTS, DETAILING, ETC. AND INSTALL THEIR WORK SO AS NOT TO INTERFERE WITH THE INSTALLATION OF ANOTHER DISCIPLINE'S WORK OR THE **GENERAL INTENT** OF THE CONSTRUCTION DOCUMENTS. IN THE EVENT OF A CONFLICT BETWEEN THE SPECIFICATIONS AND/ OR DRAWINGS, THE ARCHITECT SHALL DETERMINE WHICH INFORMATION GOVERNS.

M/P/E TRADES **NOTE**: IN REFERRING TO THIS SHEET YOU ACKNOWLEDGE:
1.) REVIEWING THE **ENTIRE** DRAWING SET INCLUDING ALL 'S', 'C' & 'A' SERIES.
2.) COORDINATING WITH THE GENERAL TRADES CONTRACTOR OR C.M. FOR EXACT DETAILING, HEIGHTS, ETC. **PRIOR** TO INSTALLING WORK.

REV	DESCRIPTION	BY	DATE

THOMAS P. OFFERLE
No. 10303150

SCO ENGINEERING, LLC
SOLUTIONS PROVIDED • PROBLEMS SOLVED
FORT WAYNE
6534 Constitution Drive
Fort Wayne, IN 46804
(260) 436-9213
(260) 432-5481 fax
scofw@sco-llc.com

J O N E S
P E T R I E
R A F I N S K I
Fort Wayne, IN
p: 260.422.2522
South Bend, IN
p: 574.232.4388

TOLL ROAD MAINTENANCE BARN
4504 N. FAIL RD
7200 N. 600 W
7565 N. 650 W
LA PORTE, IN 46350
SHIPSHEWANA, IN 46565
ORLAND, IN 46776

ITRCC
3200 CASSOPOLIS STREET
ELKHART, IN 46514

M2,M4, M5 MECHANICAL GENERAL INFORMATION

DESIGNED BY:

REVIEWED BY:

DRAWN BY:

DATE: 1/23/2025
BID SET

JOB NUMBER: 2024-01323

SCALE:
As indicated

M2, M4, M5 -M001

MECHANICAL PLAN NOTES

① PROVIDE AND INSTALL NEW EXHAUST FAN COMPLETE INCLUDING ALL CONTROLS, WIRING, DUCTWORK, INTEGRAL EXHAUST GRILLE, MOUNTING HARDWARE AND ACCESSORIES. ROUTE 6" DIAMETER DUCTWORK THROUGH EXTERIOR WALL AND TERMINATE WITH MANUFACTURERS RECOMMENDED WALL CAP. PROVIDE AND INSTALL ALL NECESSARY DUCTWORK TRANSITIONS AND FITTING AS REQUIRED. COORDINATE ROUTING WITH EXISTING STRUCTURE AND ELEVATION.

② PROVIDE AND INSTALL NEW ELECTRIC BASEBOARD RADIATOR COMPLETE.

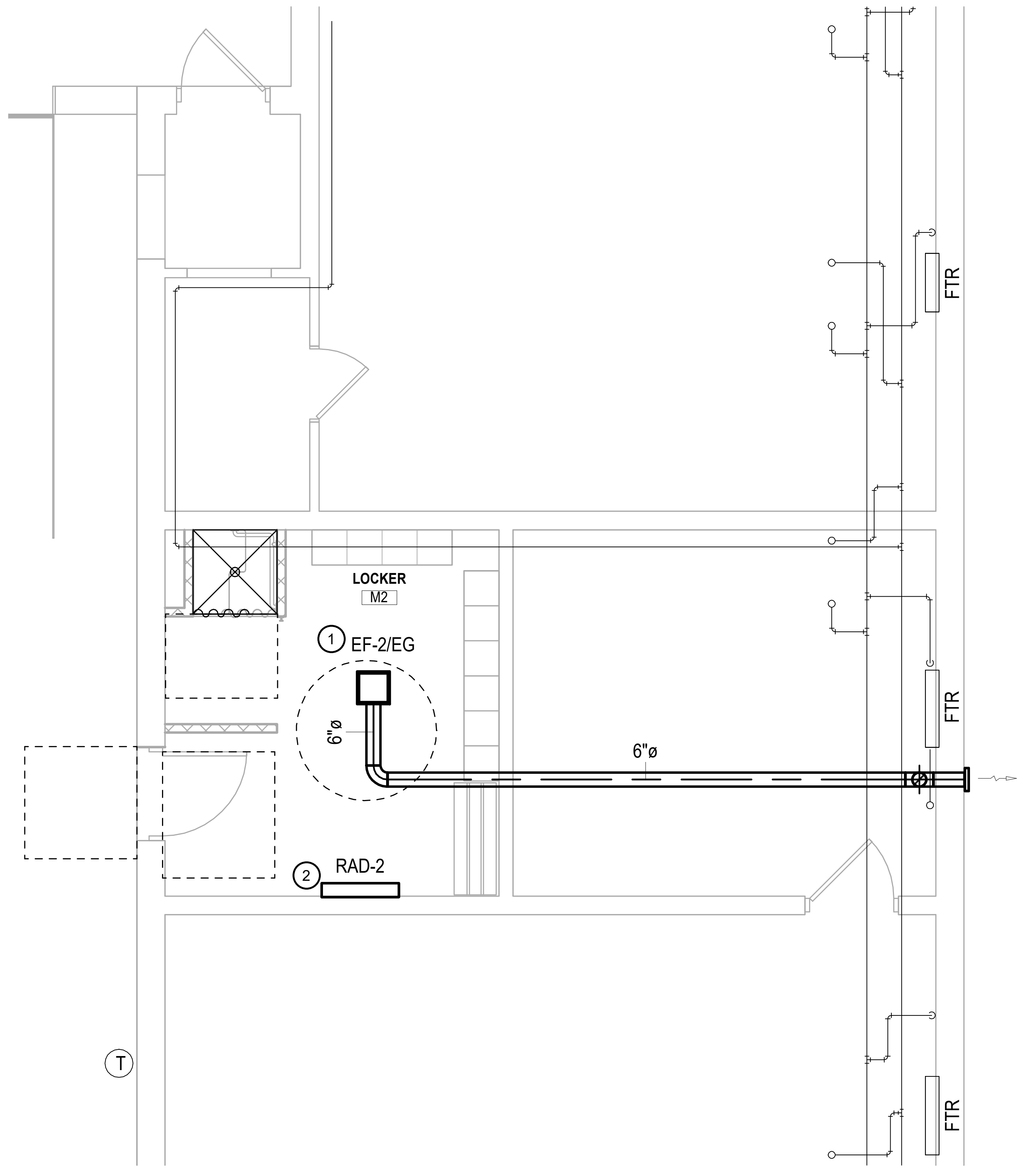

1
M2-M101
M2 MECHANICAL PLAN
1/4" = 1'-0"

N

1/22/2025 10:49:48 AM

REV	DESCRIPTION	BY	DATE

THOMAS P. OFFERLE
No. 10303150

SCO ENGINEERING, LLC
SOLUTIONS PROVIDED • PROBLEMS SOLVED
FORT WAYNE
6534 Constitution Drive
Fort Wayne, IN 46804
(260) 436-9213
(260) 432-5481 fax
scofw@sco-llc.com

JONES PETRIE RAFINSKI
South Bend, IN
p: 574.232.4388
Fort Wayne, IN
p: 260.422.2522

TOLL ROAD MAINTENANCE BARN
M-2: 4504 N. FAIL RD LA PORTE, IN 46350
M-4: 7200 N. 600 W SHIPSHEWANA, IN 46565
M-5: 7565 N. 650 W ORLAND, IN 46776

ITRCC
3200 CASSOPOLIS STREET
ELKHART, IN 46514

M2 MECHANICAL PLANS

DESIGNED BY: SJB
REVIEWED BY: TEH
DRAWN BY: TEH
DATE: 1/23/2025 BID SET
JOB NUMBER: 2024-01323
SCALE: As indicated

M2-M101

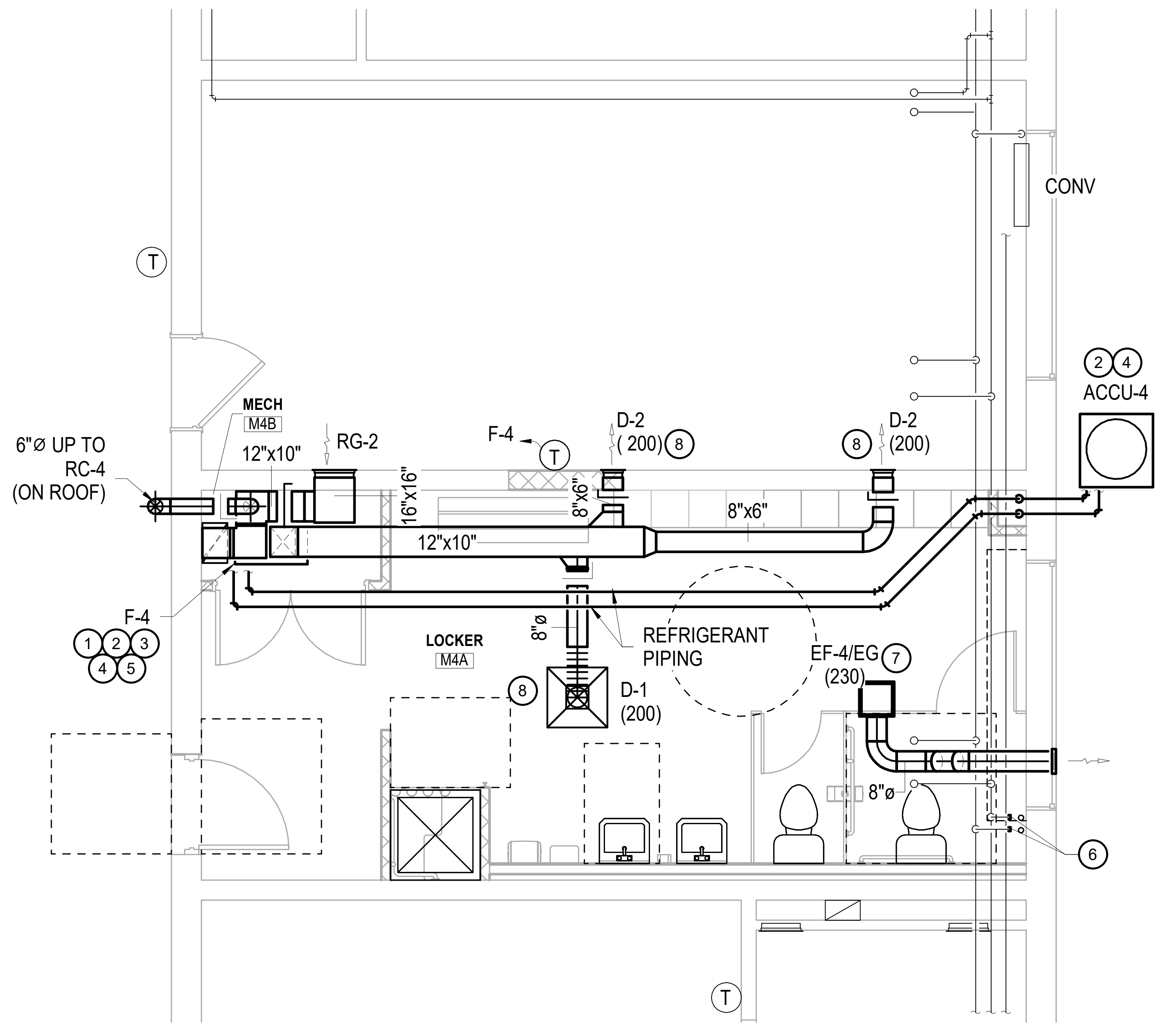

2
M4-M101
M4 MECHANICAL PLAN
1/4" = 1'-0"
N

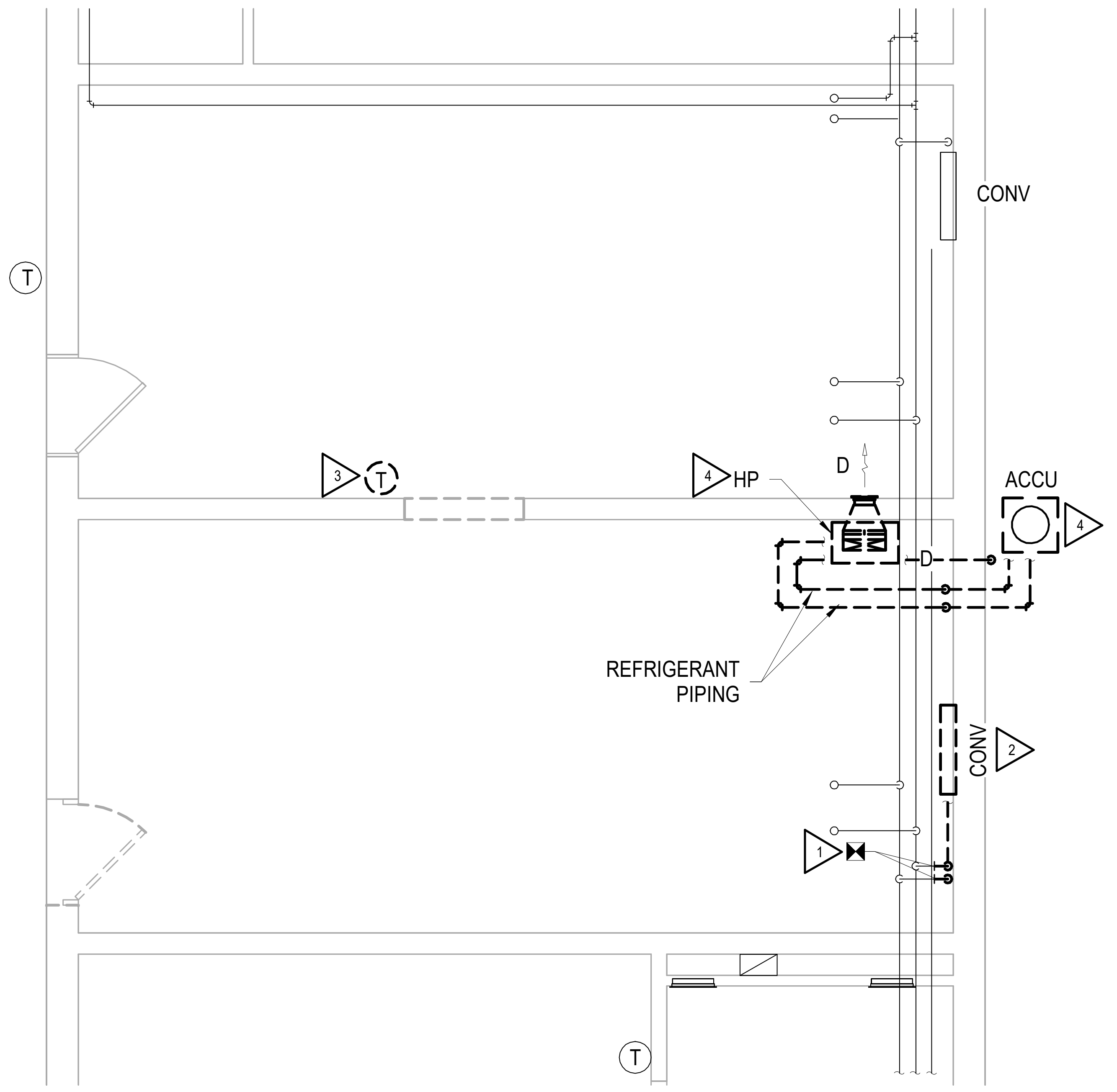

1
M4-M101
M4 MECHANICAL DEMOLITION PLAN
1/4" = 1'-0"
N

MECHANICAL DEMOLITION PLAN NOTES

1. REMOVE HWS AND HWR PIPING TO POINT INDICATED INCLUDING ALL HANGERS AND HARDWARE AND PREPARE PIPING FOR NEW WORK.
2. REMOVE CONV COMPLETE INCLUDING ALL CONTROLS, PIPING, HARDWARE AND ACCESSORIES.
3. REMOVE THERMOSTAT COMPLETE INCLUDING ALL CONTROL WIRING.
4. REMOVE AIR HANDLING UNIT COMPLETE INCLUDING ALL DUCTWORK, GRILLES, CONTROLS, WIRING, REFRIGERANT, REFRIGERANT PIPING, OUTDOOR CONDENSING UNIT, AND ACCESSORIES.

MECHANICAL PLAN NOTES

① PROVIDE AND INSTALL 3/4" CONDENSATE DRAIN AND P-TRAP TO BE CONNECTED TO CASED COOLING COIL AND ROUTE DOWN TO THE FLOOR FOR DISCHARGE OF CONDENSATE INTO FLOOR DRAIN. TERMINATE PIPING PER MANUFACTURERS RECOMMENDATIONS.

② ROUTE REFRIGERANT PIPING FROM CASED COOLING COIL AT HIGHEST POSSIBLE ELEVATION AND ROUTE THROUGH EXTERIOR WALL FOR CONNECTION TO SIDEWALL MOUNTED CONDENSING UNIT. MODIFY EXISTING REFRIGERANT LINE OPENINGS AS REQUIRED FOR PIPING PENETRATION AND SEAL WEATHER TIGHT. APPLY "UV" COATING TO ARMAFLEX INSULATION INSTALLED OUTDOORS. PIPING AT WALL PENETRATION SHALL BE ENCASED IN A PROTECTIVE PIPE SLEEVE AND SHALL BE SEALED WEATHER TIGHT. CONTRACTOR SHALL PROVIDE ALL ADDITIONAL REQUIRED REFRIGERANT LINESETS AND REFRIGERANT FOR CONNECTION FROM AIR HANDLER TO OUTDOOR UNIT AS REQUIRED FOR EXTENDED LENGTHS. INSTALL PIPING PER MANUFACTURERS RECOMMENDATION. INSTALL OUTDOOR CONDENSING ON NEW EQUIPMENT PAD.

③ PROVIDE AND INSTALL ELECTRIC HEAT FURNACE AND DX REFRIGERANT COIL IN LOCATION AS SHOWN. ROUTE DUCTWORK ABOVE NEW CEILING AS INDICATED. MECHANICAL CONTRACTOR SHALL PROVIDE AND INSTALL ALL CONTROL WIRING, RELAYS, AND ACCESSORIES AS REQUIRED TO INTERLOCK FURNACE AND ACCU FOR A COMPLETE AND FUNCTIONING SYSTEM. WIRING SHALL BE INSTALLED PER ELECTRICAL SPECIFICATIONS.

④ MAINTAIN MANUFACTURER REQUIRED CLEARANCE FOR SERVICE ACCESS AND PROPER PERFORMANCE. COORDINATE EXACT LOCATION WITH ALL TRADES.

⑤ ROUTE 6" DIAMETER OUTSIDE AIR DUCT DOWN FROM NEW ROOF CAP FOR CONNECTION INTO RETURN AIR DUCT THAT IS CONNECTED TO THE FURNACE. INSTALL MANUAL BALANCE DAMPER IN EACH DUCT AND BALANCE TO OUTSIDE AIR CFM AS SHOWN ON THE FURNACE SCHEDULE.

⑥ PROVIDE AND INSTALL CAP ON EXISTING PIPING AS INDICATED.

⑦ PROVIDE AND INSTALL NEW EXHAUST FAN COMPLETE INCLUDING ALL CONTROLS, WIRING, DUCTWORK, INTEGRAL EXHAUST GRILLE, MOUNTING HARDWARE AND ACCESSORIES. ROUTE 8" DIAMETER DUCTWORK THROUGH EXTERIOR WALL AND TERMINATE WITH MANUFACTURERS RECOMMENDED WALL CAP. PROVIDE AND INSTALL ALL NECESSARY DUCTWORK TRANSITIONS AND FITTING AS REQUIRED. COORDINATE ROUTING WITH EXISTING STRUCTURE AND ELEVATIONS.

⑧ BALANCE DIFFUSER TO CFM INDICATED.

REV	DESCRIPTION	BY	DATE

THOMAS P. OFFERLE
REGISTERED
No.
10303150
STATE OF
INDIANA
PROFESSIONAL ENGINEER

T Offerle

SCO ENGINEERING, LLC
SOLUTIONS PROVIDED • PROBLEMS SOLVED
FORT WAYNE
6534 Constitution Drive
Fort Wayne, IN 46804
(260) 436-9213
(260) 432-5481 fax
scofw@sco-llc.com

J O N E S
P E T R I E
R A F I N S K I
Fort Wayne, IN
p: 260.422.2522

JPR
South Bend, IN
p: 574.232.4388

TOLL ROAD MAINTENANCE BARN
M-2: 4504 N. FAIL RD
M-4: 7200 N. 600 W
M-5: 7565 N. 650 W
LA PORTE, IN 46350
SHIPSHEWANA, IN 46565
ORLAND, IN 46776

ITRCC
3200 CASSOPOLIS STREET
ELKHART, IN 46514

M4 MECHANICAL PLANS

DESIGNED BY:
Designer

REVIEWED BY:
Checker

DRAWN BY:
Author

DATE: 1/23/2025
BID SET

JOB NUMBER: 2024-01323

SCALE:
As indicated

M4-M101

1/22/2025 10:49:49 AM

MECHANICAL DEMOLITION PLAN NOTES

1. REMOVE HWS AND HWR PIPING TO POINT INDICATED INCLUDING ALL HANGERS AND HARDWARE AND PREPARE PIPING FOR NEW WORK.
2. REMOVE CEILING HUNG UNIT HEATER COMPLETE INCLUDING ALL CONTROLS, WIRING, AND ACCESSORIES.
3. REMOVE FINNED TUBE RADIATION COMPLETE INCLUDING ALL CONTROLS, PIPING, HARDWARE AND ACCESSORIES.
4. REMOVE THERMOSTAT COMPLETE INCLUDING ALL CONTROL WIRING.

MECHANICAL PLAN NOTES

① PROVIDE AND INSTALL 3/4" CONDENSATE DRAIN AND P-TRAP TO BE CONNECTED TO CASED COOLING COIL AND ROUTE DOWN TO THE FLOOR FOR DISCHARGE OF CONDENSATE INTO FLOOR DRAIN. TERMINATE PIPING PER MANUFACTURERS RECOMMENDATIONS.

② ROUTE REFRIGERANT PIPING FROM CASED COOLING COIL AT HIGHEST POSSIBLE ELEVATION AND ROUTE THROUGH EXTERIOR WALL FOR CONNECTION TO SIDEWALL MOUNTED CONDENSING UNIT. MODIFY EXISTING REFRIGERANT LINE OPENINGS AS REQUIRED FOR PIPING PENETRATION AND SEAL WEATHER TIGHT. APPLY "UV" COATING TO ARMAFLEX INSULATION INSTALLED OUTDOORS. PIPING AT WALL PENETRATION SHALL BE ENCASED IN A PROTECTIVE PIPE SLEEVE AND SHALL BE SEALED WEATHER TIGHT. CONTRACTOR SHALL PROVIDE ALL ADDITIONAL REQUIRED REFRIGERANT LINESETS AND REFRIGERANT FOR CONNECTION FROM AIR HANDLER TO OUTDOOR UNIT AS REQUIRED FOR EXTENDED LENGTHS. INSTALL PIPING PER MANUFACTURERS RECOMMENDATION. INSTALL OUTDOOR CONDENSING ON NEW EQUIPMENT PAD.

③ PROVIDE AND INSTALL ELECTRIC HEAT FURNACE AND DX REFRIGERANT COIL IN LOCATION AS SHOWN. ROUTE DUCTWORK ABOVE NEW CEILING AS INDICATED. MECHANICAL CONTRACTOR SHALL PROVIDE AND INSTALL ALL CONTROL WIRING, RELAYS, AND ACCESSORIES AS REQUIRED TO INTERLOCK FURNACE AND ACCU FOR A COMPLETE AND FUNCTIONING SYSTEM. WIRING SHALL BE INSTALLED PER ELECTRICAL SPECIFICATIONS.

④ MAINTAIN MANUFACTURER REQUIRED CLEARANCE FOR SERVICE ACCESS AND PROPER PERFORMANCE. COORDINATE EXACT LOCATION WITH ALL TRADES.

⑤ ROUTE 6" DIAMETER OUTSIDE AIR DUCT DOWN FROM NEW ROOF CAP FOR CONNECTION INTO RETURN AIR DUCT THAT IS CONNECTED TO THE FURNACE. INSTALL MANUAL BALANCE DAMPER IN EACH DUCT AND BALANCE TO OUTSIDE AIR CFM AS SHOWN ON THE FURNACE SCHEDULE.

⑥ PROVIDE AND INSTALL CAP ON EXISTING PIPING AS INDICATED.

⑦ PROVIDE AND INSTALL NEW SECTION OF STRAIGHT PIPE IN EXSTING PIPING AS INDICATED.

⑧ PROVIDE AND INSTALL NEW EXHAUST FAN COMPLETE INCLUDING ALL CONTROLS, WIRING, DUCTWORK, INTEGRAL EXHAUST GRILLE, MOUNTING HARDWARE AND ACCESSORIES. ROUTE 8" DIAMETER DUCTWORK THROUGH EXTERIOR WALL AND TERMINATE WITH MANUFACTURERS RECOMMENDED WALL CAP. PROVIDE AND INSTALL ALL NECESSARY DUCTWORK TRANSITIONS AND FITTING AS REQUIRED. COORDINATE ROUTING WITH EXISTING STRUCTURE AND ELEVATIONS.

⑨ PROVIDE AND INSTALL NEW ELECTRIC BASEBOARD RADIATOR COMPLETE

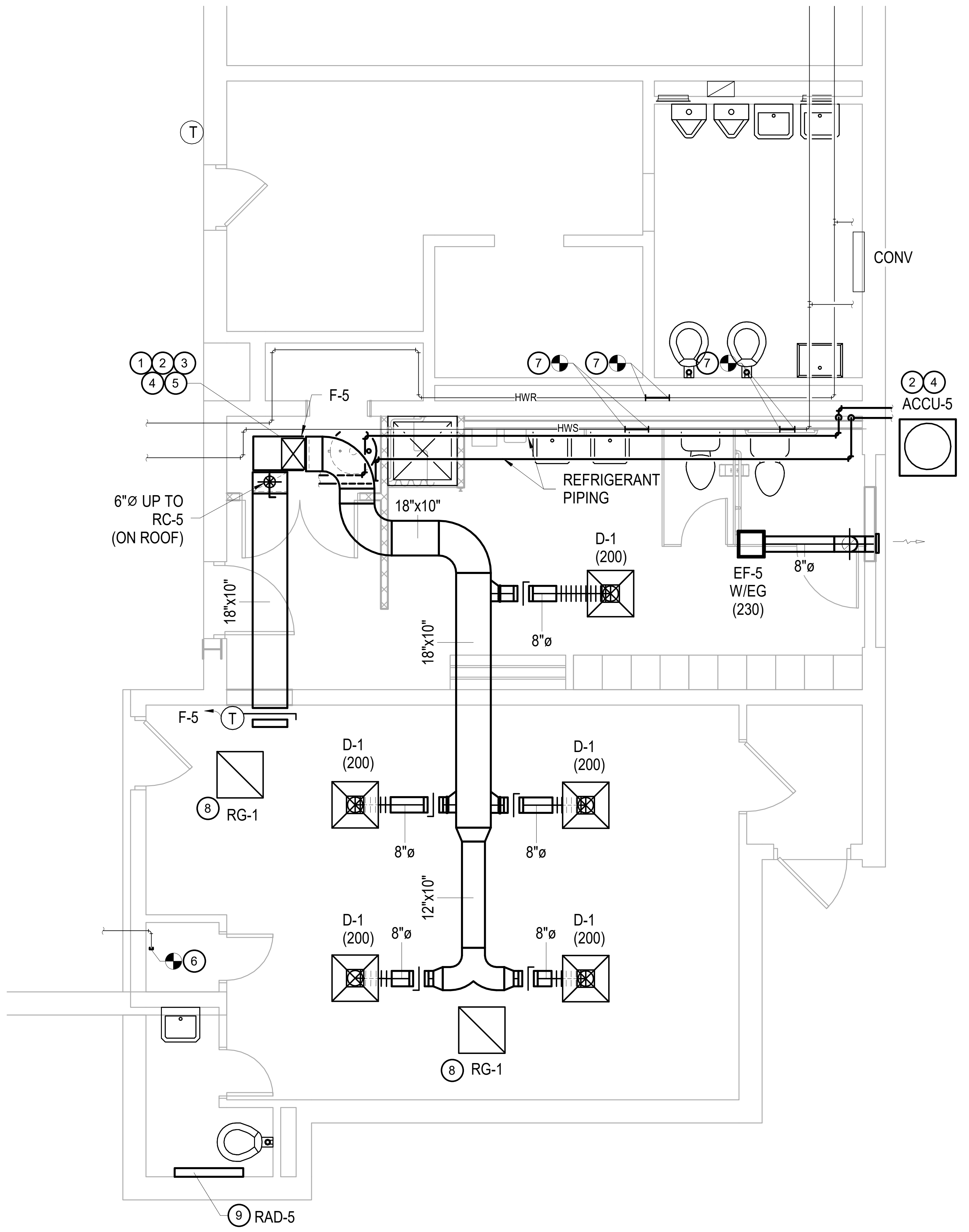

2 M5 MECHANICAL PLAN

M5-M101 1/4" = 1'-0"

N

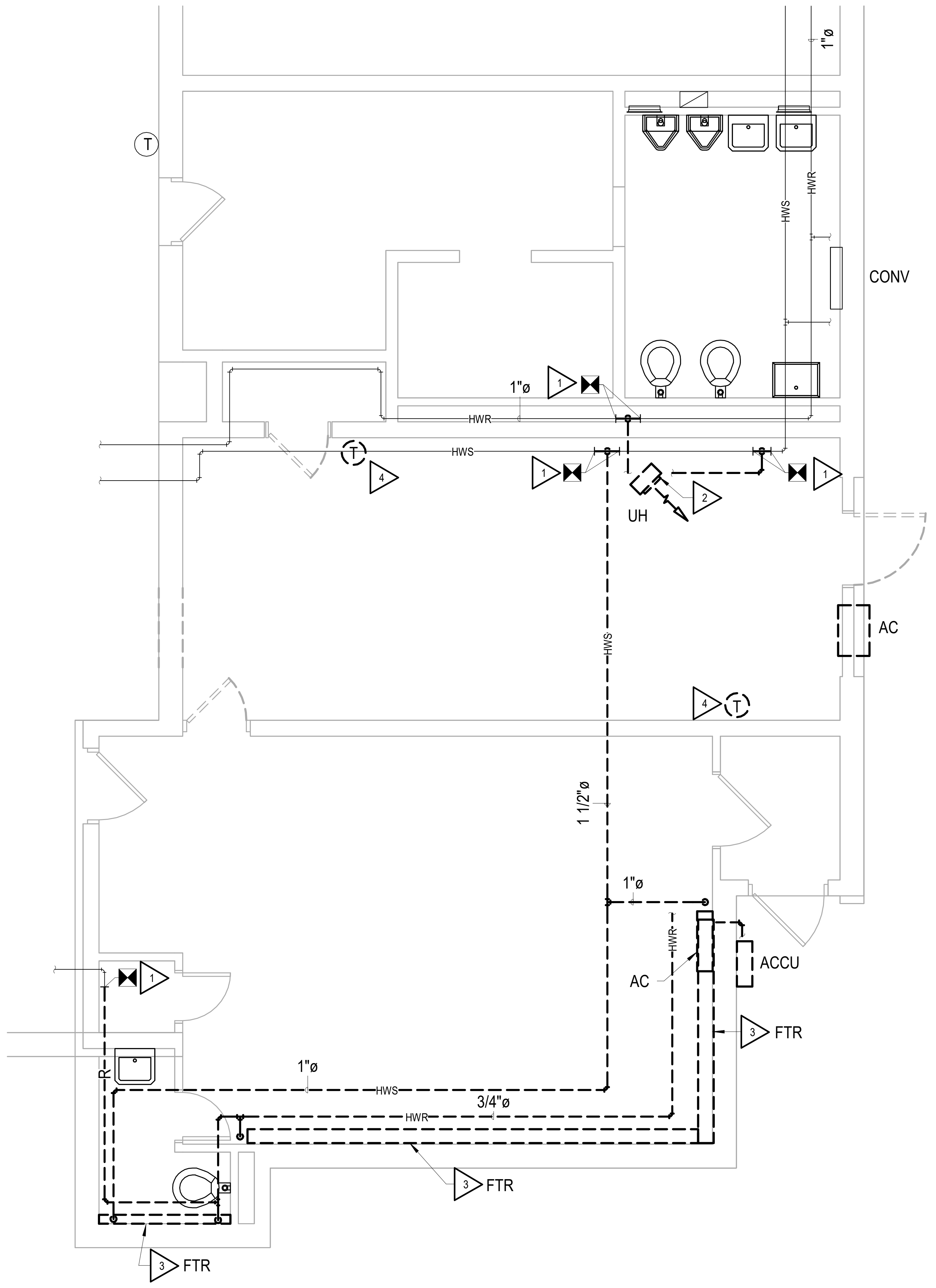

1 M5 MECHANICAL DEMOLITION PLAN

M5-M101 1/4" = 1'-0"

N

REV	DESCRIPTION	BY	DATE

THOMAS P. OFFERLE
REGISTERED
No.
10303150
STATE OF
INDIANA
PROFESSIONAL ENGINEER

Hofferle

SCO ENGINEERING, LLC
SOLUTIONS PROVIDED • PROBLEMS SOLVED
FORT WAYNE
6534 Constitution Drive
Fort Wayne, IN 46804
(260) 436-9213
(260) 432-5481 fax
scofw@sco-llc.com

JONES
PETRIE
RAFINSKI
South Bend, IN
p: 574.232.4388
Fort Wayne, IN
p: 260.422.2522

TOLL ROAD MAINTENANCE BARN
M-2: 4504 N. FAIL RD LA PORTE, IN 46350
M-4: 7200 N. 600 W SHIPSHEWANA, IN 46565
M-5: 7565 N. 650 W ORLAND, IN 46776

ITRCC
3200 CASSOPOLIS STREET ELKHART, IN 46514

M5 MECHANICAL PLANS

DESIGNED BY:	Designer
REVIEWED BY:	Checker
DRAWN BY:	Author
DATE:	1/23/2025 BID SET
JOB NUMBER:	2024-01323
SCALE:	As indicated

M5-M101

1/22/2025 10:49:50 AM

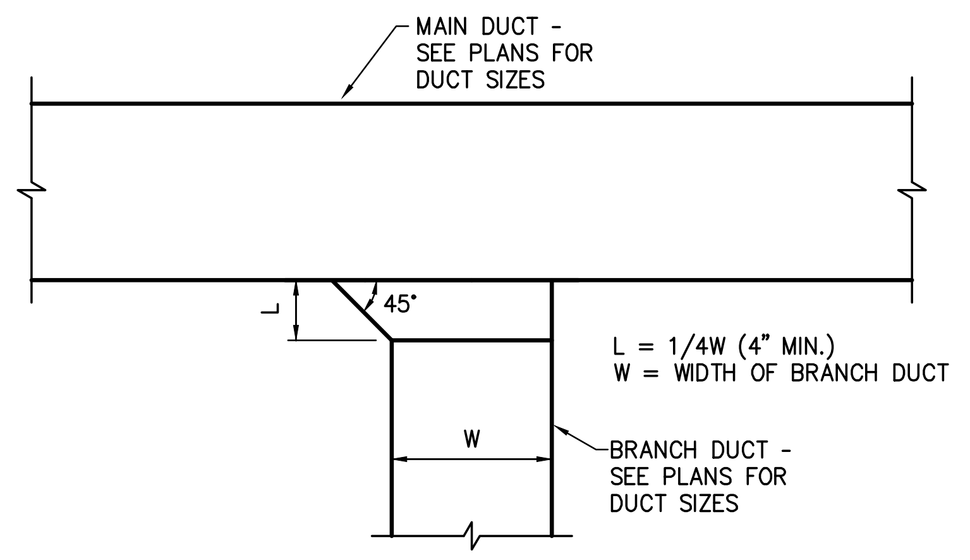
MAIN DUCT - SEE PLANS FOR DUCT SIZES
45°
L
L = 1/4W (4" MIN.)
W = WIDTH OF BRANCH DUCT
W
BRANCH DUCT - SEE PLANS FOR DUCT SIZES

6 TYPICAL RECTANGULAR TO RECTANGULAR DUCT TAKE OFF

NOT TO SCALE

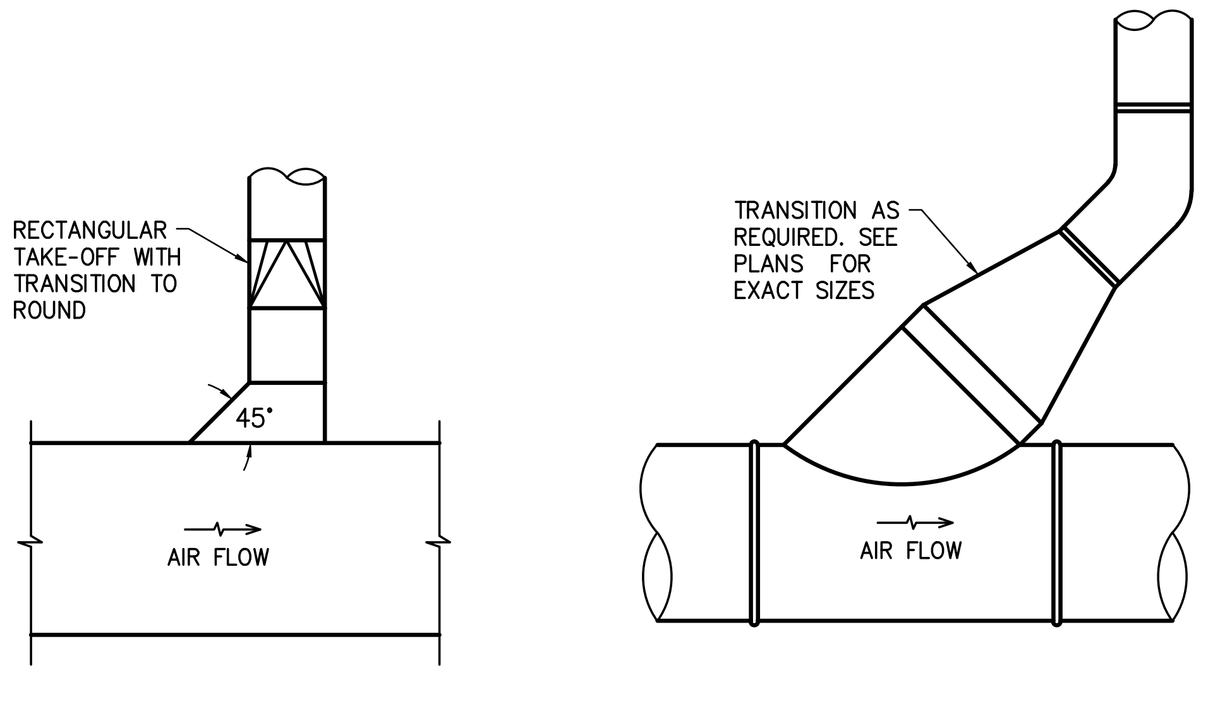
RECTANGULAR TAKE-OFF WITH TRANSITION TO ROUND
45°
AIR FLOW
TRANSITION AS REQUIRED. SEE PLANS FOR EXACT SIZES
AIR FLOW

RECTANGULAR TO ROUND

ROUND TO ROUND

5 TYPICAL DUCT TAKE-OFF

NOT TO SCALE

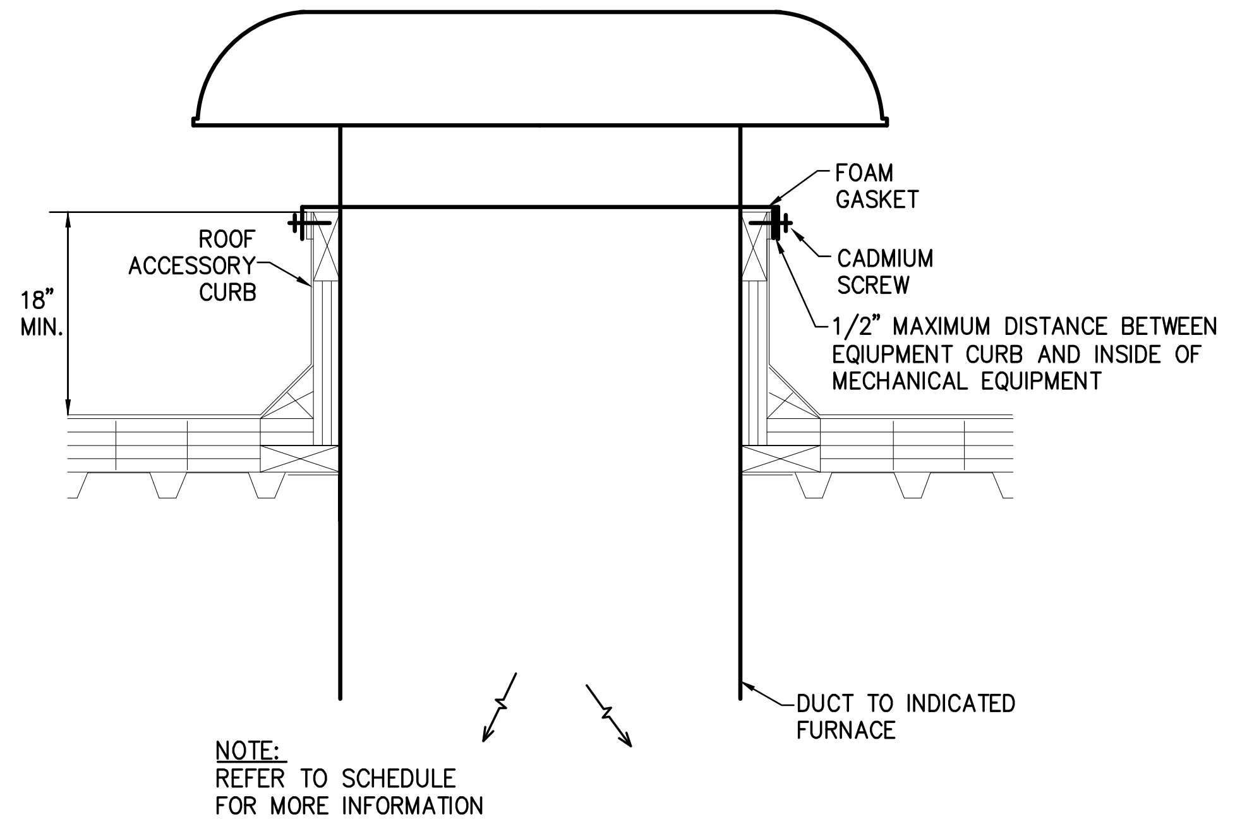
FOAM GASKET
ROOF ACCESSORY CURB
CADMIUM SCREW
18" MIN.
1/2" MAXIMUM DISTANCE BETWEEN EQUIPMENT CURB AND INSIDE OF MECHANICAL EQUIPMENT
DUCT TO INDICATED FURNACE

NOTE:
REFER TO SCHEDULE FOR MORE INFORMATION

4 OUTSIDE AIR ROOF CAP DETAIL

NOT TO SCALE

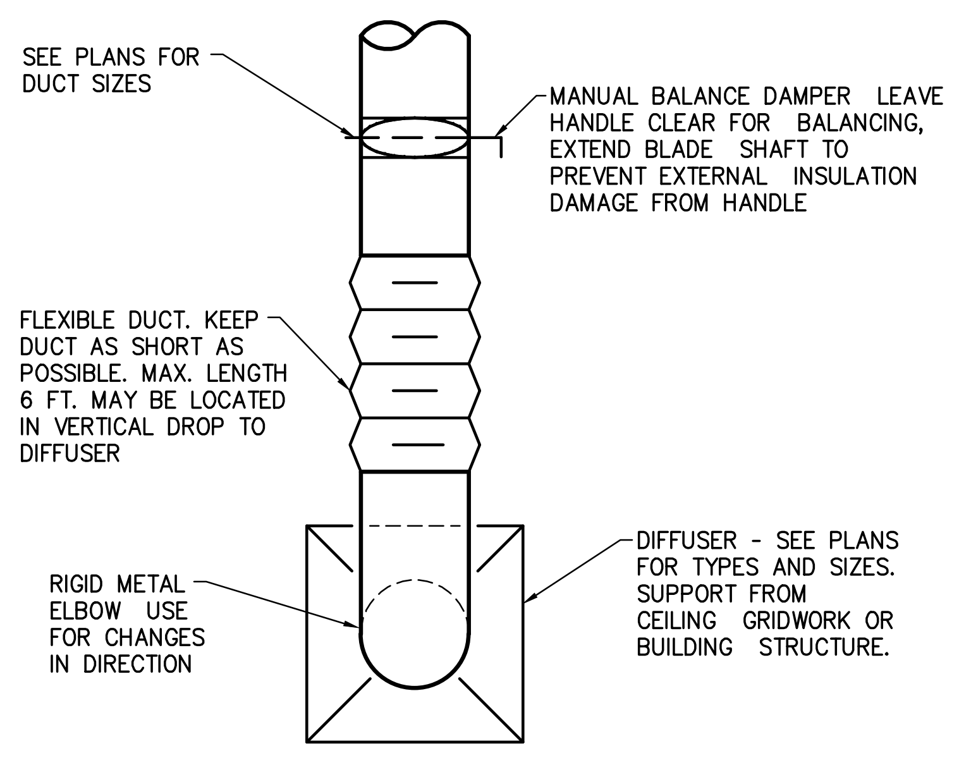
SEE PLANS FOR DUCT SIZES
MANUAL BALANCE DAMPER LEAVE HANDLE CLEAR FOR BALANCING, EXTEND BLADE SHAFT TO PREVENT EXTERNAL INSULATION DAMAGE FROM HANDLE
FLEXIBLE DUCT. KEEP DUCT AS SHORT AS POSSIBLE. MAX. LENGTH 6 FT. MAY BE LOCATED IN VERTICAL DROP TO DIFFUSER
RIGID METAL ELBOW USE FOR CHANGES IN DIRECTION
DIFFUSER - SEE PLANS FOR TYPES AND SIZES. SUPPORT FROM CEILING GRIDWORK OR BUILDING STRUCTURE.

3 TYPICAL CEILING DIFFUSER INSTALLATION DETAIL

NOT TO SCALE

FURNACE SCHEDULE

TAG	MFG	MODEL	AIR FLOW (CFM) SUPPLY	RETURN	OA	ESP	BLOWER HP	COOLING MBH (TOT)	MBH (SEN)	COIL EA DB/WB	OA EAT DB/WB	HEATING KW	FUEL	ELECTRICAL VOLT/PH/HZ	MOP	FILTER MEDIA TYPE	EFF (%)	REMARKS
F-4	YORK	JHE18	600	550	50	0.8"	0.33	18	13.5	74/61	88/72	10	ELECTRIC	208/3/60	50	HIGH VELOCITY	MERV. 8	1, 2, 3
F-5	YORK	JHE30	1000	935	65	0.8"	0.5	31	28	83/64	88/72	15	ELECTRIC	208/1/60	80	HIGH VELOCITY	MERV. 8	1, 2, 3

REMARKS:
1. PROVIDE UNIT WITH ELECTRIC HEAT, MULTI- SPEED DIRECT DRIVE BLOWER, CONDENSATE NEUTRALIZATION KIT, AND RETURN FILTER RACK FOR SIDE RETURN.
2. PROVIDE AND INSTALL UNIT WITH CASED COOLING COIL AND ALL REQUIRED REFRIGERANT LINE SETS, AND ACCESSORIES REQUIRED FOR A COMPLETE INSTALLATION.
3. PROVIDE WITH HONEYWELL VISION PRO 8000 TOUCH SCREEN PROGRAMABLE THERMOSTAT.

ROOF CAP SCHEDULE

TAG	MFG.	MODEL	THROAT SIZE (IN)	FUNCTION	AIR FLOW (CFM)	MAX PD (IN)	MAX THROAT VEL. (FPM)	MATERIAL	LOCATION	REMARKS
RC-4	GREENHECK	GRSI-8	8.25	OA INTAKE	50	0.04	180	ALUMINUM	M4 FURNACE	1
RC-5	GREENHECK	GRSI-8	8.25	OA INTAKE	65	0.04	180	ALUMINUM	M5 FURNACE	1

REMARKS:
1. PROVIDE 18" TALL INSULATED ROOF CURB.

CONDENSING UNIT SCHEDULE

TAG	MFG	MODEL	EQUIPMENT SERVED	NOM CAPACITY (TONS)	AMBIENT (F)	MIN EFF. (SEER)	CAPACITY STEPS	COMPRESSORS	ELECTRICAL VOLT / PH / HZ	MCA	MOP	REMARKS
ACCU-4	YORK	YC318	F-4	1.5	105	13.4	1	1	208 / 1 / 60	9.1	15	1, 2
ACCU-5	YORK	YC430	F-5	2.5	105	15.5	1	1	208 / 1 / 60	16.2	25	1, 2

REMARKS:
1. PROVIDE UNIT WITH 1 STAGE SCROLL COMPRESSOR WITH CRANKCASE HEATER FOR LOAD MATCHING CAPABILITY.
2. PROVIDE UNIT WITH TXV, LINESET AND R-454B REFRIGERANT. CONTRACTOR SHALL CONFIRM LINE SET SIZES WITH MANUFACTURER AND PROVIDE AND INSTALL AS REQUIRED.

DIFFUSER SCHEDULE

TAG	MFG	MODEL	NECK	FACE	PATT	MAX CFM	MAX PD (TOTAL)	MAX NC	THROW (FEET)	MATERIAL	REMARKS
D-1	TITUS	OMNI	8"	24" x 24"	PLAQUE	280	0.06	20	11	STEEL	1, 2
D-2	TITUS	272 RS	8" x 6"	10" x 8"	DOUBLE DEFL	200	0.04	20	23	STEEL	1, 2
RG-1	TITUS	50F	22" x 22"	24" x 24"	EGGCRATE	2200	0.07	20	-	ALUMINUM	1, 2
RG-2	TITUS	350 RL	16" x 16"	18" x 18"	SIDEWALL	650	0.04	20	-	STEEL	1, 2

REMARKS:
1. PROVIDE ALL NECESSARY TRIM AND BORDERS FOR INSTALLATION INTO CEILING TYPES AND WALLS. REFER TO ARCHITECTURAL DRAWINGS FOR ROOM FINISHES.
2. PROVIDE AND INSTALL DUCT TRANSITION FITTINGS AS REQUIRED FOR CONNECTION TO DIFFUSERS AND GRILLES.

EXHAUST/VENTILATION FAN SCHEDULE

TAG	MFG	MODEL	CFM	ESP	SONES	ELECT	CONTROL	AREA SERVED	REMARKS
EF-2	BROAN	XB110	110	0.125"	0.3	120 / 1	OCCUPANCY	M2 SHOWER	1, 2, 3
EF-4	BROAN	L200E	230	0.125"	1.5	120 / 1	OCCUPANCY	M4 RESTROOM	1, 2, 3
EF-5	BROAN	L200E	230	0.125"	1.5	120 / 1	OCCUPANCY	M5 RESTROOM	1, 2, 3

REMARKS:
1. PROVIDE AND INSTALL WITH DISCONNECT SWITH, PLASTIC GRILLE, AND ALL NECESSARY MOUNTING HARDWARE.
2. PROVIDE AND INSTALL WITH MANUFACTUERS WALL CAP.
3. WALL CAP TO BE PAINTED. COLOR TO BE SELECTED BY ARCHITECT.

RADIATION SCHEDULE

TAG	ENCLOSURE MFG	TYPE	MODEL	DEPTH (IN)	HEIGHT (IN)	LENGTH (IN)	ELEMENT WATTS (KW)	TOTAL BTUH	ELECT	AREA SERVED	REMARKS
RAD-2	BERKO	CONVECTION	BKOC25726W	3	7	30	0.5	1706	120 / 1	M2 SHOWER	1, 2
RAD-5	BERKO	CONVECTION	BKOC25726W	3	7	30	0.5	1706	120 / 1	M5 RESTROOM	1, 2

REMARKS:
1. PROVIDE AND INSTALL UNIT WITH INTEGRAL, TAMPER PROOF DOUBLE POLE THERMOSTAT, FACTORY WIRED DOUBLE POLE DISCONNECT, AND LINEAR THERMAL CUT-OUT.
2. PROVIDE AND INSTALL ENCLOSURES WITH ALL CORNERS, END CAPS, COUPLINGS, BACKPLATES, HANGERS, AS REQUIRED FOR COMPLETE INSTALLATION.

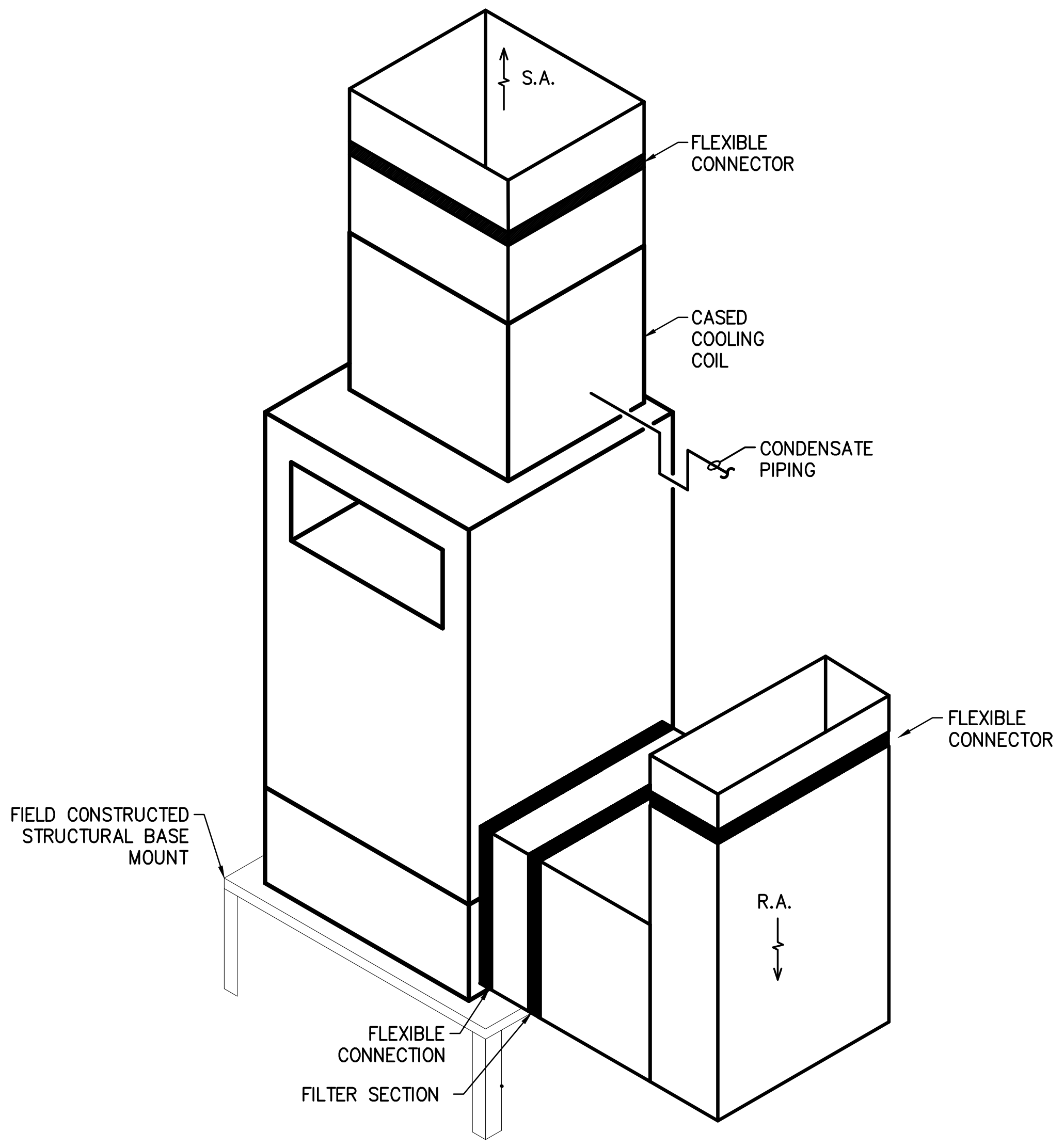
S.A.
FLEXIBLE CONNECTOR
CASED COOLING COIL
CONDENSATE PIPING
FLEXIBLE CONNECTOR
R.A.
FIELD CONSTRUCTED STRUCTURAL BASE MOUNT
FLEXIBLE CONNECTION
FILTER SECTION

2 UP-FLOW FURNACE WITH SIDE RETURN

NOT TO SCALE

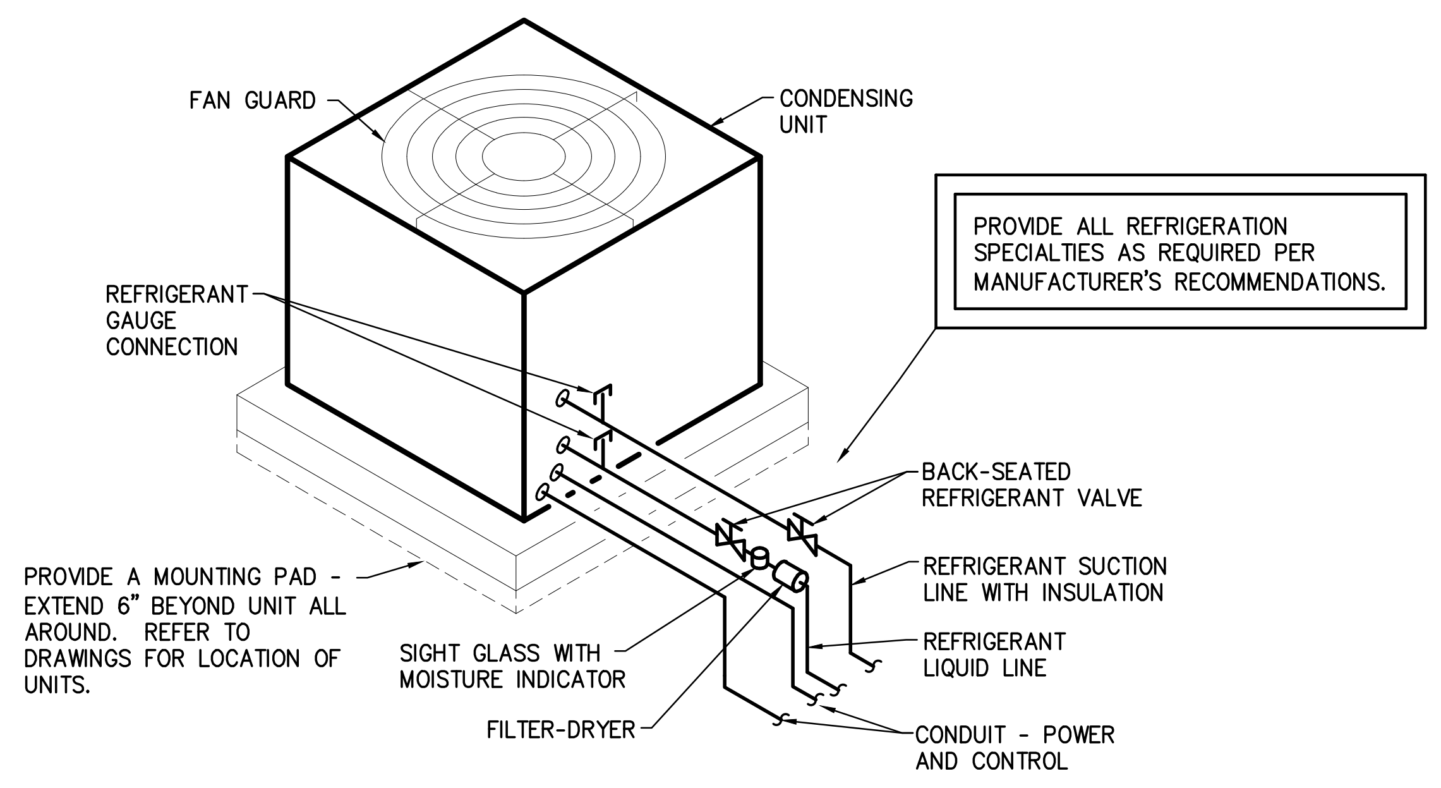
FAN GUARD
CONDENSING UNIT
REFRIGERANT GAUGE CONNECTION
BACK-SEATED REFRIGERANT VALVE
REFRIGERANT SUCTION LINE WITH INSULATION
REFRIGERANT LIQUID LINE
SIGHT GLASS WITH MOISTURE INDICATOR
FILTER-DRYER
CONDUIT - POWER AND CONTROL

PROVIDE ALL REFRIGERATION SPECIALTIES AS REQUIRED PER MANUFACTURER'S RECOMMENDATIONS.

PROVIDE A MOUNTING PAD - EXTEND 6" BEYOND UNIT ALL AROUND. REFER TO DRAWINGS FOR LOCATION OF UNITS.

1 TYPICAL ACCU - PAD MOUNTED AT GRADE

NOT TO SCALE

REV	DESCRIPTION	BY	DATE

THOMAS P. OFFERLE
No. 10303150

T Offerle

SCO ENGINEERING, LLC
SOLUTIONS PROVIDED • PROBLEMS SOLVED
FORT WAYNE
6534 Constitution Drive
Fort Wayne, IN 46804
(260) 436-9213
(260) 432-5481 fax
scofw@sco-llc.com

JONES PETRIE RAFINSKI
South Bend, IN
p: 574.232.4388
Fort Wayne, IN
p: 260.422.2522

TOLL ROAD MAINTENANCE BARN
4504 N. FAIL RD — LA PORTE, IN 46350
7200 N. 600 W — SHIPSHEWANA, IN 46565
7565 N. 650 W — ORLAND, IN 46776

ITRCC

3200 CASSOPOLIS STREET
ELKHART, IN 46514

M2,M4, M5 MECHANICAL DETAILS AND SCHEDULES

DESIGNED BY:
REVIEWED BY:
DRAWN BY:
DATE: 1/23/2025
BID SET
JOB NUMBER: 2024-01323
SCALE: As indicated

M2, M4, M5 -M501

ELECTRICAL SYMBOL SCHEDULE

** ALL DEVICE INDICATED ON SYMBOL SCHEDULE SHALL BE PROVIDED AND INSTALL BY CONTRACTOR PER SPECIFICATIONS. IF AN ITEM IS NOT SPECIFIED PER MANUFACTURE, CONTRACTOR SHALL NOTIFY ENGINEER ON REQUIRED MANUFACTURERS SPECIFICATIONS.

▷X	DEMOLITION PLAN NOTE: X INDICATES A DEMOLITION NOTE FOUND IN THE ELECTRICAL DEMOLITION PLAN NOTE BOX SPECIFIC TO THE DRAWING ON WHICH IT APPEARS. (WILL NOT BE FOUND ON BUILDINGS THAT ARE NEW CONSTRUCTION)
(X)	PLAN NOTE: X INDICATES A PLAN NOTE FOUND IN THE ELECTRICAL PLAN NOTE BOX SPECIFIC TO THE DRAWING ON WHICH IT APPEARS.
⬡X	POWER CONDUIT AND CONDUCTOR SCHEDULE: X INDICATES NOTE ON SCHEDULE DESCRIBING CONDUIT SIZE, CONDUCTOR SIZE AND QUANTITY.
CM]Z KCAKC \CLK 3QJD QWUH[2HF]SGK	DOUBLE BORDER NOTE BOX: A GENERAL NOTE THAT APPLIES TO THE ENTIRE DRAWING OR DETAIL WHERE IT APPEARS.
XX/YY	DETAIL BUBBLE: XX INDICATES DETAIL NUMBER, YY INDICATES SHEET NUMBER ON WHICH APPEARS. DETAIL BUBBLE WILL NOT BE SHOWN AT EVERY SITUATION ON THE FLOOR PLAN WHERE IT IS REQUIRED TO BE FOLLOWED, IT WILL SHOWN AT SEVERAL LOCATIONS TO GIVE THE CONTRACTOR A TYPICAL IDEA OF THE REQUIREMENTS.
ⓜ	METERBASE AS NOTED
▬	DISTRIBUTION PANEL
▬	SURFACE MOUNTED PANELBOARD
▬	RECESSED MOUNTED PANELBOARD
)	INVERSE THERMAL-MAGNETIC CIRCUIT BREAKER UNLESS OTHERWISE NOTED
⊠	TRANSFORMER
⊠ XX	COMBINATION STARTER AND FUSED DISCONNECT SWITCH; XX INDICATES STARTER NUMBER, REFER TO SCHEDULE.
▭ XX	NONFUSED HEAVY DUTY DISCONNECT SWITCH; XX INDICATES AMPERE RATING
▭ XX	FUSED HEAVY DUTY DISCONNECT SWITCH; XX INDICATES FUSE SIZE
⏏	ENCLOSED CIRCUIT BREAKER
▭	FLOOR MOUNTED UNISTRUT STAND, REFER TO DETAIL
(M)	MOTOR
○▬○	GROUND BUS
◉XX	SPECIAL PURPOSE RECEPTACLE; XX INDICATES REQUIRED AMPERAGE, NEMA CONFIGURATION SHALL MATCH CORD SET OF EQUIPMENT BEING PROVIDED
ϕ	EXISTING RECEPTACLE
$ ϕ	NEW DEVICE AS NOTED WITHIN EXISTING ROUGH-IN AND TERMINATED TO EXISTING BRANCH CIRCUIT
ϕ	120 VOLT, 20 AMPERE DUPLEX RECEPTACLE. MOUNT AT 16 INCHES ABOVE FINISHED FLOOR UNLESS OTHERWISE NOTED
ϕϕ	120 VOLT, 20 AMPERE DOUBLE DUPLEX RECEPTACLE, MOUNT AT 16 INCHES ABOVE FINISHED FLOOR UNLESS OTHERWISE NOTED
ϕ	120 VOLT, 20 AMPERE DUPLEX RECEPTACLE. MOUNT HORIZONTAL WITHIN CASEWORK TOE-KICK, REFER TO DETAIL
ϕϕ	120 VOLT, 20 AMPERE DUPLEX OR SINGLE RECEPTACLE. MOUNT AT 44 INCHES ABOVE FINISHED FLOOR OR 4 INCHES ABOVE CASEWORK/COUNTER, OR 2 INCHES ABOVE CASEWORK/COUNTER WITH BACKSPLASH
⊖▯⊖	ELECTRIC CORD AND CABLE REEL, REFER TO DETAIL.
$ϕ^{T}$	120 VOLT, 20 AMPERE TAMPERPROOF DUPLEX RECEPTACLE. MOUNT AT 16 INCHES ABOVE FINISHED FLOOR UNLESS OTHERWISE NOTED
$ϕ^{EWC}$	120 VOLT, 20 AMPERE SINGLE RECEPTACLE FOR ELECTRIC WATER COOLER. MOUNT SO RECEPTACLE IS CONCEALED BEHIND WATER COOLER COVER
$ϕ^{G}$	120 VOLT, 20 AMPERE DUPLEX RECEPTACLE WITH GROUND FAULT CIRCUIT INTERRUPTER. MOUNT AT 16 INCHES ABOVE FINISHED FLOOR UNLESS OTHERWISE NOTED
ϕ	120 VOLT, 20 AMPERE DUPLEX RECEPTACLE WITH USB CHARGER PORTS. MOUNT AT 16 INCHES ABOVE FINISHED FLOOR UNLESS OTHERWISE NOTED
$ϕ^{WP}_{G}$	120 VOLT, 20 AMPERE DUPLEX RECEPTACLE WITH GROUND FAULT CIRCUIT INTERRUPTER WITH HUBBELL #WP26MH COVER. MOUNT HORIZONTAL AT 24 INCHES ABOVE FINISHED GRADE UNLESS OTHERWISE NOTED

(T)	THERMOSTAT
EE	ELECTRIC EYE FOR OVERHEAD DOOR
PE	PHOTO CELL
CX	LIGHTING CONTACTOR, X INDICATES CONTACTOR NUMBER
HD	HAIR OR HAND DRYER
⊙ FBX	FLUSH MOUNTED FLOOR BOX FOR POWER AND TEL/COM, CONTRACTOR SHALL VERIFY EXACT LOCATION PRIOR TO ROUGH-IN/INSTALLATION WITH ARCHITECT. REFER TO DETAIL.
D_{X}	DATA OUTLET: X DENOTES NUMBER OF DATA DROPS PER OUTLET, REFER TO DETAIL
V	VOICE OUTLET, REFER TO DETAIL
V	VOICE OUTLET, REFER TO DETAIL, MOUNT AT +44" A.F.F.
V_{W}	VOICE OUTLET (WALL PHONE), REFER TO DETAIL
V_{A}	ANALOG VOICE OUTLET, REFER TO DETAIL
DV_{X}	DATA/VOICE OUTLET: X INDICATES NUMBER OF DATA DROPS PER OUTLET, REFER TO DETAIL
PD_{X}	120V DOUBLE DUPLEX RECEPTACLE ADJACENT TO DATA OUTLET, X INDICATES NUMBER OF DATA OUTLETS, REFER TO DETAIL
$_{X}DV^{A}$	ANALOG VOICE/VOICE/DATA OUTLET: X INDICATES NUMBER OF DATA OUTLET, REFER TO DETAIL
TWSX	TEACHERS WORK STATION, REFER TO DETAIL
TVAX	VIDEO/AUDIO DISTRIBUTION OUTLET, REFER TO DETAIL
TV	TELEVISION DISTRIBUTION OUTLET, REFER TO DETAIL
CR	CARD READER ROUGH-IN MOUNTED AT 44" A.F.F. UNLESS OTHERWISE NOTED.
╫╫╫╫	CONTINUOUS CENTER HUNG RAIL/RUNG ALUMINUM CABLE TRAY
[—]	EMT SYSTEMS TEL/COM SLEEVE, PROVIDE WITH ARLINGTON INDUSTRIES EMT BUSHING AND FIRE STOP AT EACH END. X INDICATES INSIDE DIAMETER OF SLEEVE, (Y) INDICATES QUANTITY
WP	"WP" INDICATES WEATHERPROOF DEVICE
WG	"WG" INDICATES WIRE GUARDED DEVICE, EXTERIOR WIRE GUARDS SHALL BE STAINLESS STEEL
SP	SCRAMBLE PAD
⟨M⟩	DOOR MONITOR
RI	DUCT MOUNTED SMOKE DETECTOR WALL MOUNTED REMOTE INDICATOR LABELED BY UNIT AND DUCT FUNCTION
FACP	FIRE ALARM CONTROL PANEL
FAA	FIRE ALARM ANNUNCIATOR
FAEP	FIRE ALARM EXTENDER PANEL, QUANTITY REQUIRED SHALL BE DETERMINED BY FIRE ALARM SYSTEM MANUFACTURER
■ PIV	FIRE ALARM POST INDICATOR VALVE, PROVIDE AND INSTALL SIGNAL MODULE AND TERMINATE TO FACP AS REQUIRED
(JX)	REFER TO JUNCTION BOX SCHEDULE
(J)	JUNCTION BOX AS REQUIRED FOR ROUGH-IN OR TERMINATION WHEN NOT SPECIFIED
LV-X,X	INDICATES SINGLE POLE CIRCUITS
LV-X(X)	INDICATES TWO POLE CIRCUITS
LV-X(X,X)	INDICATES THREE POLE CIRCUITS
▬	SURFACE RACEWAY MOUNTED DEVICE, REFER TO DETAILS FOR REQUIRED SURFACE RACEWAY - WHERE HATCHED RECTANGLE SYMBOL IS NOT SHOWN FOR DEVICE LOCATED ON AN EXISTING WALL, SURFACE MOUNTED CONDUIT IS ACCEPTABLE FOR LOCATION
▼	DEVICE OR BRANCH CIRCUIT FEED THAT SHALL BE CUT-IN OR SLOTTED INTO EXISTING SURFACE. WHERE INDICATED ADJACENT TO UNOCCUPIED AREAS, SURFACE CONDUIT MAY BE INSTALLED AND FED THRU WALL INTO BACK OF THE SURFACE DEVICE
⌒→	HOME RUN TO PANELBOARD
⌒→	UNDER SLAB OR UNDERGROUND HOME RUN TO PANELBOARD
⌒	BRANCH CIRCUIT
⌒	UNDER SLAB OR UNDERGROUND BRANCH CIRCUIT

XX a	2X2 LUMINAIRE;XX INDICATES FIXTURE TYPE, a INDICATES SWITCH LEG
a XX	2X4 LUMINAIRE; XX INDICATES LUMINAIRE TYPE, a INDICATES SWITCH LEG
a XX	1X4 LUMINAIRE, XX INDICATES LUMINAIRE TYPE, a INDICATES SWITCH LEG
XX a ◢ XX a	EMERGENCY LUMINAIRE; XX INDICATES LUMINAIRE TYPE, a INDICATES SWITCH LEG, PROVIDE EM BALLAST OR GTD AS REQUIRED
XX a	STRIP LUMINAIRE; XX INDICATES LUMINAIRE TYPE. a INDICATES SWITCH LEG
XX ○ a	CEILING/SURFACE PENDANT MOUNTED LUMINAIRE; XX INDICATES LUMINAIRE TYPE, a INDICATES SWITCH LEG
XX ○ a	WALL/SURFACE MOUNTED LUMINAIRE; XX INDICATES LUMINAIRE TYPE, a INDICATES SWITCH LEG
XX	WALL MOUNTED EMERGENCY LIGHT; XX INDICATES LUMINAIRE TYPE, TERMINATE TO LINE-SIDE OF RESPECTIVE LIGHTING CIRCUIT FEEDING AREA WHERE LUMINAIRE IS LOCATED, TO BE MOUNTED 6" BELOW CEILING OR 10' FOR CEILINGS OVER 11'-0" A.F.F.
XX ⊗ ↕	UNIVERSAL MOUNT EXIT LIGHT WITH DIRECTIONAL ARROW(S); XX INDICATES FIXTURE TYPE, TERMINATE TO LINE-SIDE OF RESPECTIVE LIGHTING CIRCUIT FEEDING AREA WHERE FIXTURE IS LOCATED. EXIT LIGHTS MAY BE CEILING MOUNTED WHEN CEILING IS 10' AFF OR LESS. WHEN CEILING HEIGHT IS MORE THAN 10' AFF, WALL MOUNT ABOVE FINISHED DOOR FRAME
XX ⊗	UNIVERSAL MOUNT EXIT LIGHT WITH NO DIRECTIONAL ARROWS; XX INDICATES FIXTURE TYPE, TERMINATE TO LINE-SIDE OF RESPECTIVE LIGHTING CIRCUIT FEEDING AREA WHERE FIXTURE IS LOCATED. EXIT LIGHTS MAY BE CEILING MOUNTED WHEN CEILING IS 10' AFF OR LESS. WHEN CEILING HEIGHT IS MORE THAN 10' AFF, WALL MOUNT ABOVE FINISHED DOOR FRAME
XX△ ⊗ ▽	UNIVERSAL MOUNT EXIT LIGHT/EMERGENCY LIGHT COMBO WITH NO DIRECTIONAL ARROWS. XX INDICATES FIXTURE TYPE, TERMINATE TO LINE-SIDE OF RESPECTIVE LIGHTING CIRCUIT FEEDING AREA WHERE FIXTURE IS LOCATED. EXIT LIGHTS MAY BE CEILING MOUNTED WHEN CEILING IS 10' AFF OR LESS. WHEN CEILING HEIGHT IS MORE THAN 10' AFF, WALL MOUNT 16" ABOVE FINISHED DOOR FRAME
XX ⊙ a	GROUND OR IN-GROUND MOUNTED LUMINAIRE XX INDICATES FIXTURE TYPE, a INDICATES SWITCH LEG
$\$^{T}_{P}$	120 OR 277 VOLT MANUAL MOTOR STARTER SWITCH WITH PILOT LIGHT AND THERMAL OVERLOAD PROTECTION
$\$_{a}$	120-277 VOLT, SINGLE POLE, 20 AMPERE AC SWITCH
$\$_{a}\$_{b}$	120-277 VOLT, SINGLE POLE, 20 AMPERE AC SWITCHES. "ab" INDICATES OUTBOARD LAMPS TO BE ON SWITCH "a" AND INBOARD LAMP(S) TO BE ON SWITCH "b"
$\$^{2}$	120-277 VOLT, DOUBLE POLE, 20 AMPERE AC SWITCH
$\$^{3}$	120-277 VOLT, THREE WAY, 20 AMPERE AC SWITCH
$\$^{4}$	120-277 VOLT, FOUR WAY, 20 AMPERE AC SWITCH
$\$^{D}$	120-277 VOLT, 60 Hz, SINGLE POLE DIMMER SWITCH. PROVIDE 0-10V DIMMING UNLESS OTHERWISE NOTED
$\$^{P}$	120-277 VOLT, 20 AMPERE AC SWITCH WITH PILOT LIGHT
$\$^{S}$	SPECIAL PURPOSE SWITCH
$\$_{cb}$	20A/1P CIRCUIT BREAKER IN A NEMA 1 LOCKABLE ENCLOSURE
OS ⊙ xy	CEILING MOUNTED OCCUPANCY SENSOR, DUAL TECHNOLOGY 'x' AND 'y' INDICATE SWITCH LEG, REFER TO OCCUPANCY SCHEDULE
⊙ OS xy	WALL MOUNTED LARGE AREA OCCUPANCY SENSOR, DUAL TECHNOLOGY 'x' AND 'y' INDICATE SWITCH LEG, REFER TO OCCUPANCY SCHEDULE
◁F	FIRE ALARM HORN/VISUAL. MOUNT AT 80 INCHES ABOVE FINISHED FLOOR
◁F V	FIRE ALARM VISUAL. MOUNT AT 80 INCHES ABOVE FINISHED FLOOR
▽ F	MANUAL FIRE ALARM PULL STATION AND HORN/STROBE. MOUNT PULL STATION AT 44 INCHES AND HORN/STROBE AT 80 INCHES ABOVE FINISHED FLOOR
F	MANUAL FIRE ALARM PULL STATION. MOUNT AT 44 INCHES ABOVE FINISHED FLOOR
$(F)_{T}$	FIRE ALARM CEILING MOUNTED THERMAL DETECTOR
$(F)_{S}$	FIRE ALARM CEILING MOUNTED SMOKE DETECTOR
◇F	FIRE ALARM DUCT MOUNTED SMOKE DETECTOR. QUANTITY AND INSTALLATION POSITION SHALL BE FIELD DETERMINED BY FINAL DUCT CONFIGURATION AND MANUFACTURER'S REQUIREMENTS

GENERAL CONDITIONS NOTE

ALL CONTRACTORS, BY MAKING THEIR BID, REPRESENT THAT THEY HAVE READ AND UNDERSTAND THE CONSTRUCTION DOCUMENTS. THE CONTRACTOR SHALL REFER TO THE ENTIRE CONSTRUCTION DOCUMENT SET FOR GUIDANCE ON DIMENSIONS, HEIGHTS, DETAILING, ETC. AND INSTALL THEIR WORK SO AS NOT TO INTERFERE WITH THE INSTALLATION OF ANOTHER DISCIPLINE'S WORK OR THE GENERAL INTENT OF THE CONSTRUCTION DOCUMENTS. IN THE EVENT OF A CONFLICT BETWEEN THE SPECIFICATIONS AND/ OR DRAWINGS, THE ARCHITECT SHALL DETERMINE WHICH INFORMATION GOVERNS.

M/P/E TRADES NOTE: IN REFERRING TO THIS SHEET YOU ACKNOWLEDGE:
1.) REVIEWING THE ENTIRE DRAWING SET INCLUDING ALL 'S', 'C' & 'A' SERIES.
2.) COORDINATING WITH THE GENERAL TRADES CONTRACTOR OR C.M. FOR EXACT DETAILING, HEIGHTS, ETC. PRIOR TO INSTALLING WORK.

FIRE ALARM DEVICES ARE SHOWN FOR QUANTITY AND GENERAL LOCATION, DEVICES MOUNTED ON CEILINGS AND/OR WALLS MAY REQUIRE UP TO A 24" LATERAL ADJUSTMENT TO AVOID INTERFERENCE WITH OTHER COMPONENTS (SPRINKLER HEADS, DIFFUSERS, LIGHT FIXTURES, DISPLAY WALLS, WHITE BOARDS, ETC.), ANY REQUIRED LATERAL ADJUSTMENT MUST BE BROUGHT TO THE ENGINEER'S ATTENTION AND BE DIRECTED BY THE ENGINEER.

GENERAL ELECTRICAL DEMOLITION NOTES

DASHED ELECTRICAL ITEMS WHICH INCLUDE BUT ARE NOT LIMITED TO: RECEPTACLES, SWITCHES, LIGHT FIXTURES, DISCONNECTS, MOTOR STARTERS, PANELS, OCCUPANCY SENSORS, SPEAKERS, FIRE ALARM DEVICES, AND DATA/VOICE OUTLETS INDICATE EXISTING ITEMS TO REMAIN. DASHED ELECTRICAL ITEMS WITH "R" SUBSCRIPT OR DEMO NOTE INDICATES EXISTING ELECTRICAL ITEMS TO BE REMOVED ALONG WITH ALL ASSOCIATED BACK BOXES, COVER PLATES, ASSOCIATED COMPONENTS, CONDUIT, CONDUCTORS, AND SUPPORTS BACK TO ORIGINATION, UNLESS OTHERWISE NOTED.

EXISTING ELECTRICAL ITEMS NOT SLATED FOR REMOVAL, SHALL BE FULLY OPERATIONAL AT THE COMPLETION OF CONSTRUCTION. REROUTE AND/OR EXTEND CONDUIT AND CONDUCTORS AS REQUIRED.

EXISTING ELECTRICAL DEVICES THAT ARE TO REMAIN WITHIN RENOVATED AREAS SHALL BE REPLACED WITH NEW DEVICES AND COVER PLATES PER SPECIFICATIONS.

EXISTING ELECTRICAL ITEMS INDICATED ON DRAWINGS ARE BELIEVED TO BE A REASONABLE REPRESENTATION OF ACTUAL BUILDING. FIELD VERIFY PRIOR TO BID FOR DETERMINATION OF EXACT QUANTITY AND LOCATION OF ELECTRICAL ITEMS THAT MAY NOT BE SHOWN. THESE DRAWINGS ARE INTENDED TO ONLY BE AN AID FOR BIDDING PURPOSES.

REMOVE ELECTRICAL ITEMS ALONG WITH CONDUIT AND CONDUCTORS FROM WALLS THAT ARE TO BE REMOVED.

REMOVE CONDUIT AND SURFACE RACEWAYS NO LONGER IN USE, CUT EMBEDDED CONDUIT FLUSH WITH EXISTING SURFACE AND FILL WITH NON-SHRINKING GROUT.

WHERE CUTTING OF THE EXISTING BUILDING ROOF, FLOORS, WALLS AND/OR CEILINGS ARE REQUIRED TO COMPLETE ELECTRICAL CONSTRUCTION, AND NO RESTORATION IS CALLED FOR BY OTHER CONSTRUCTION TRADES WITHIN DOCUMENTS. THE ELECTRICAL CONTRACTOR SHALL BEAR ENTIRE COST FOR RESTORATION TO MATCH ADJACENT FINISHES. WORK SHALL BE PERFORMED BY PROPER CORRESPONDING ON-SITE CONTRACTOR AND PAID FOR BY ELECTRICAL CONTRACTOR, REFER TO ENTIRE SET OF DRAWINGS AND SPECIFICATIONS FOR COORDINATION.

DISCONNECT EXISTING MECHANICAL EQUIPMENT SLATED FOR REMOVAL BY OTHERS, REFER TO MECHANICAL DEMOLITION DRAWINGS.

REMOVE ABANDONED JUNCTION/OUTLET BOXES IN WALLS, FLOORS, OR CEILINGS THAT ARE TO REMAIN.

DISPOSE OF REMOVED ELECTRICAL COMPONENTS CONTAINING HAZARDOUS MATERIALS, PER EPA REQUIREMENTS.

OWNER SHALL HAVE FIRST RIGHT OF REFUSAL ON ALL ITEMS REMOVED.

DUE TO CONSTRUCTION PHASING, IT WILL BE NECESSARY TO REROUTE SOME EXISTING POWER FEEDERS AND BRANCH CIRCUITS FOR POWER DISTRIBUTION SYSTEMS AND BRANCH CONDUIT AND CABLING FOR SPECIALTY SYSTEMS TO ALLOW FOR NEW CONSTRUCTION TO TAKE PLACE. IT WILL ALSO BE NECESSARY TO TEMPORARILY FEED NEW POWER DISTRIBUTION AND NEW SPECIALTY SYSTEMS FROM EXISTING, AND BACK-FEED EXISTING FROM NEW. SPECIALTY SYSTEMS INCLUDE BUT ARE NOT LIMITED TO FIRE ALARM SYSTEM, PA SYSTEM, CLOCK SYSTEM, ETC. PHASING SHALL BE COORDINATED WITH CONSTRUCTION MANAGER.

ANY EXISTING TO REMAIN RACEWAYS LOCATED ABOVE EXISTING CEILING SPACES, LOCATED IN EXISTING WALLS OR FLOORS WHICH ARE NOT DEPICTED ON DOCUMENTS, BUT ARE REQUIRED TO BE RELOCATED AS A PART OF THE OVERALL CONSTRUCTION, SHALL BE RELOCATED AS REQUIRED TO ACCOMMODATE OTHER TRADES.

ELECTRICAL NOTES AND SPECIFICATIONS

VERIFY ALL DIMENSIONS FROM THE ARCHITECTURAL PLANS.

ELECTRICAL COSTS SHALL CONSIST OF REQUIRED LABOR AND MATERIAL TO COMPLETELY INSTALL ELECTRICAL WORK AS INDICATED ON THESE DRAWINGS.

THE ENTIRE INSTALLATION SHALL CONFORM TO THE LATEST VERSION OF THE NATIONAL ELECTRICAL CODE AND ALL STATE AND LOCAL CODES.

THE ENTIRE ELECTRICAL SYSTEM SHALL BE GROUNDED IN ACCORDANCE WITH THE NATIONAL ELECTRICAL CODE.

SUBMITTALS SHALL BE FORWARDED TO THE ENGINEER FOR REVIEW AND RELEASE FOR THE FOLLOWING MATERIALS: CONDUIT, CONDUIT FITTINGS, WIRE, BOXES, WIRING DEVICES, COVER PLATES, LIGHT FIXTURES, BALLASTS, LAMPS, PANELBOARDS, MOTOR STARTERS, SAFETY SWITCHES, AND UNISTRUT.

DIMENSIONS SHOWN OR NOTED FOR OUTLET BOXES AND DEVICES SHALL BE TO THE BOTTOM OF THE BOX.

COORDINATE LOCATION OF LIGHT FIXTURES IN AREAS OF MECHANICAL DUCTWORK AND PIPING WITH MECHANICAL CONTRACTOR. RELOCATE LIGHT FIXTURES, WIRING AND CONDUIT IF NECESSARY AS DIRECTED BY THE ARCHITECT/ENGINEER.

CIRCUIT ARCS SHOWN FROM LIGHT SWITCH TO LIGHT SWITCH INDICATE BRANCH CIRCUIT FEED FOR POWER, SWITCH-LEG BRANCH BETWEEN FIXTURES AND INTERLOCK (TRAVELERS) BETWEEN SWITCHES SHALL BE AS REQUIRED.

VERIFY HEIGHT AND LOCATION OF RECEPTACLES BEHIND ELECTRIC WATER COOLERS WITH THE MECHANICAL CONTRACTOR BEFORE ROUGH-IN.

THE ELECTRICAL DRAWINGS ARE FOR LAYOUT PURPOSES AND DIAGRAMMATIC IN NATURE. REFER TO THE ENTIRE CONSTRUCTION DRAWING SET AND SPECIFICATIONS FOR GUIDANCE ON DIMENSIONS, CEILING HEIGHTS, DOOR SWINGS, ROOM FINISHES, STRUCTURAL DETAILS, LOCATIONS OF DUCTWORK, PIPING AND STRUCTURAL MEMBERS. INSTALL THE ELECTRICAL SYSTEMS SO AS NOT TO INTERFERE WITH THE INSTALLATION OR FUNCTION OF ANOTHER DISCIPLINES WORK.

AT NO TIME SHALL A BACK-TO-BACK DEVICE BOX BE USED, DEVICES THAT APPEAR DIAGRAMATICALLY BACK-TO-BACK ON THE DRAWINGS SHALL BE ROUGHED-IN ON OPPOSITE SIDES OF A FRAMING MEMBER OR IN SEPARATE CMU CELLS.

ALL DIMENSIONS OF EXISTING CONSTRUCTION ARE APPROXIMATE. THE ELECTRICAL CONTRACTOR SHALL MAKE ALL NECESSARY FIELD MEASUREMENTS OF EXISTING STRUCTURES, AND EQUIPMENT TO VERIFY DIMENSIONS SHOWN ON THE DRAWINGS PRIOR TO BID. PROVIDE PROPER DIMENSIONS NOT SHOWN PRIOR TO EQUIPMENT FABRICATION. ALL COST FOR MODIFICATIONS OF NEW CONSTRUCTION DUE TO LACK OF CONFIRMATION OF DIMENSIONS BY FIELD MEASUREMENTS SHALL BE BORNE BY THE ELECTRICAL CONTRACTOR.

PROVIDE ADDITIONAL SUPPORT FOR SWITCHES, STARTERS, RACEWAY, GROUNDING SYSTEMS, AND OTHER ELECTRICAL EQUIPMENT WHEREVER THE BUILDING STRUCTURE IS NOT SUITABLE FOR DIRECT MOUNTING.

PROVIDE FIRE STOPPING AROUND ALL ELECTRICAL COMPONENTS PENETRATING FIRE RATED WALLS, FLOORS OR CEILINGS. STI SPECSEAL, 3M, OR HILTI FIRESTOP PRODUCTS SHALL BE INSTALLED PER MANUFACTURERS APPLICATION GUIDE, ALTERNATE MANUFACTURERS MUST RECEIVE ENGINEER'S PRIOR APPROVAL.

COORDINATE ALL ELECTRICAL REQUIREMENTS FOR EQUIPMENT WIRING. ANY CHANGES REQUIRED DUE TO EQUIPMENT BEING SUPPLIED OTHER THAN WHAT IS SPECIFIED SHALL BE BORNE BY THE CONTRACTOR WHO INSTIGATED THE CHANGE.

SIZING OF BRANCH CIRCUITS AND FEEDERS FOR EQUIPMENT IS BASED ON DESIGN LOADS. PRIOR TO INSTALLATION CONFIRM EXACT LOADS WITH RELEASED SHOP DRAWINGS. BRING DISCREPANCIES TO THE ENGINEER'S ATTENTION FOR DESIGN CHANGES PRIOR TO ROUGH-IN.

ALL BRANCH CIRCUITS SHALL BE WIRED WITH A MINIMUM OF 3/4"C, #12 PHASE CONDUCTOR, #12 GROUNDED (NEUTRAL) CONDUCTOR, AND A 1-#12 EQUIPMENT GROUNDING CONDUCTOR UNLESS NOTED OTHERWISE ON THE PLANS. MULTIWIRE BRANCH CIRCUITS, SHARING A SINGLE GROUNDED CONDUCTOR SHALL NOT BE USED.

WHERE CONDUIT AND WIRING HAS NOT BEEN SHOWN ON THE DRAWINGS THE ARRANGEMENT AND ROUTING OF LIGHTING AND RECEPTACLE BRANCH CIRCUITS WILL BE AT THE CONTRACTORS DISCRETION IN ACCORDANCE WITH GENERALLY ACCEPTED GOOD PRACTICE, N.E.C. REQUIREMENTS AND THE FOLLOWING LIMITATIONS:

EXCEPT WHERE NOTED OTHERWISE, SIZE BRANCH CIRCUIT CONDUCTORS WITHIN THE FOLLOWING MAXIMUM LENGTH LIMITS: (MEASURE TO THE CENTER OF THE LOAD FOR LIGHTING AND MOST REMOTE OUTLET FOR RECEPTACLE CIRCUITS).

CIRCUIT BREAKER	CIRCUIT LENGTH	CONDUCTOR SIZE
120V, 20A	65 FEET	#12
	110 FEET	#10
	165 FEET	#8
	270 FEET	#6

PROVIDE #12 AWG MINIMUM FOR ALL 120 VOLT CIRCUITS. PROVIDE ADDITIONAL DERATING PER NEC TABLES 310.15(B)(2)(a) FOR ALL BRANCH CIRCUITS WITH MORE THAN THREE CURRENT CARRYING CONDUCTORS IN A RACEWAY.

ALL WIRE SHALL BE COPPER WITH TYPE THW, THHN, THWN, OR XHHW INSULATION. ALL UNDERGROUND CONDUCTORS SHALL BE WET LOCATION RATED. ALL CONDUCTORS SHALL HAVE FACTORY APPLIED COLOR THE ENTIRE LENGTH OF THE INSULATION TO READILY IDENTIFY IT AS A SPECIFIC PHASE, NEUTRAL, OR EQUIPMENT GROUNDING CONDUCTOR AT ANY POINT ALONG IT'S ENTIRE LENGTH.

ALL BOXES SHALL BE PRESSED STEEL, SINGLE PIECE (NON-GANGABLE) TYPE.

ALL DEVICE COVER PLATES SHALL BE STAINLESS STEEL.

ALL COVER PLATES FOR DEVICES AND JUNCTION BOXES SHALL HAVE CIRCUIT NUMBERS LABELED WITH INDELIBLE INK MARKER, DEVICE COVERS SHALL BE LABELED ON THE BACK, JUNCTION BOX COVERS SHALL BE LABELED ON THE FRONT.

RECEPTACLES SHALL BE 120 VOLT, 20A, WITH PART NUMBERS AS LISTED BY HUBBELL OR EQUAL BY COOPER, OR P&S. COLOR SHALL BE CHOSEN BY ARCHITECT.

SINGLE RECEPTACLE	#HBL5361X
DUPLEX RECEPTACLE	#HBL5352X
GFCI RECEPTACLE	#GF5352X

SWITCHES SHALL BE 120/277V, 20A, WITH PART NUMBERS AS LISTED BY HUBBELL OR EQUAL BY COOPER, OR P&S. COLOR SHALL BE CHOSEN BY ARCHITECT.

SINGLE POLE	#HBL1221
THREE WAY	#HBL1223
FOUR WAY	#HBL1224

HVAC CONTROL WIRING SHALL BE THE RESPONSIBILITY OF THE MECHANICAL CONTRACTOR IN ACCORDANCE WITH SPECIFICATIONS UNLESS OTHERWISE NOTED.

LIGHT FIXTURES SHALL BE AS SCHEDULED, WITH ONLY PRE-APPROVED EQUAL FIXTURES ACCEPTABLE.

PANELBOARDS, MOTOR STARTERS, SAFETY SWITCHES (HEAVY DUTY), ETC., SHALL BE AS MANUFACTURED BY G.E., SQUARE D, SIEMENS, OR CUTLER HAMMER. ALL BUS SHALL BE COPPER. ALL CIRCUIT BREAKERS SHALL BE BOLT-ON TYPE. A COMPUTER GENERATED CIRCUIT SCHEDULE SHALL BE PROVIDED IN EACH PANELBOARD.

ALL EQUIPMENT THAT IS TO BE MOUNTED ON MASONRY WALLS SHALL BE MOUNTED ON A 12ga. UNISTRUT AT LEAST 7/8" FROM WALL.

THE ELECTRICAL CONTRACTOR SHALL REVIEW ALL SPECIFICATION SECTIONS, EQUIPMENT SCHEDULES, AND/OR DETAILS THROUGHOUT DOCUMENTS THAT PERTAIN TO EQUIPMENT PROVIDED BY OTHERS AND INCLUDE ALL WIRING AND DEVICES REFERENCED IN THEIR BIDS. ELECTRICAL CONTRACTOR SHALL COORDINATE EXACT LOCATION OF THIS EQUIPMENT WITH RESPECTIVE CONTRACTOR PRIOR TO ROUGH-IN.

ALL CONDUIT, BOXES, AND WIRING DEVICES IN ALL AREAS SHALL BE RAN IN CONCEALED SPACES OR RECESSED IN WALLS EXCEPT IN MECHANICAL/ELECTRICAL ROOMS OR WITH SPECIFIC PERMISSION FROM ARCHITECT/ENGINEER.

WHERE PATCHING OF THE EXISTING BUILDING ROOF, FLOORS, WALLS AND/OR CEILINGS ARE REQUIRED TO COMPLETE ELECTRICAL CONSTRUCTION, AND NO RESTORATION IS CALLED FOR BY OTHER CONSTRUCTION TRADES WITHIN DOCUMENTS, THE ELECTRICAL CONTRACTOR SHALL BEAR ENTIRE COST FOR RESTORATION TO MATCH ADJACENT FINISHES. WORK SHALL BE PERFORMED BY PROPER CORRESPONDING ON-SITE CONTRACTOR AND PAID FOR BY ELECTRICAL CONTRACTOR, REFER TO ENTIRE SET OF DRAWINGS AND SPECIFICATIONS FOR COORDINATION.

ELECTRICAL CONTRACTOR IS RESPONSIBLE FOR LOCATION OF ALL UNDERGROUND UTILITIES BOTH PUBLIC AND PRIVATE THAT MAY INTERFERE WITH ELECTRICAL CONSTRUCTION.

ALL WORK SHOWN ON THESE DOCUMENTS IS NEW AND BY THE ELECTRICAL CONTRACTOR UNLESS OTHERWISE NOTED.

ALL EQUIPMENT AND MATERIALS SHALL BE UL LISTED AND LABELED FOR TYPE OF EQUIPMENT AND MATERIALS FOR WHICH LISTING AND LABELING IS AVAILABLE.

REV	DESCRIPTION	BY	DATE

THOMAS P. OFFERLE
No. 10303150
STATE OF INDIANA

TOfferle

SCO ENGINEERING, LLC
SOLUTIONS PROVIDED • PROBLEMS SOLVED
FORT WAYNE
6534 Constitution Drive
Fort Wayne, IN 46804
(260) 436-9213
(260) 432-5481 fax
scofw@sco-llc.com

JONES PETRIE RAFINSKI
South Bend, IN
p: 574.232.4388
Fort Wayne, IN
p: 260.422.2522

TOLL ROAD MAINTENANCE BARN
4504 N. FAIL RD LA PORTE, IN 46350
7200 N. 600 W SHIPSHEWANA, IN 46565
7565 N. 650 W ORLAND, IN 46776

ITRCC
3200 CASSOPOLIS STREET
ELKHART, IN 46514

ELECTRICAL GENERAL NOTES AND SCHEDULES

DESIGNED BY: NLG
REVIEWED BY: TPO
DRAWN BY: NLG
DATE: 1/23/2025
BID SET
JOB NUMBER: 2024-01323
SCALE: As indicated

M2, M4, M5-E000

ELECTRICAL DEMOLITION PLAN NOTES

1	ELECTRICAL CONTRACTOR SHALL REMOVE EXISTING LIGHTING FIXTURE, PREPARE EXISTING CONDUCTORS FOR NEW WORK.
2	ELECTRICAL CONTRACTOR SHALL REMOVE EXISTING LIGHTING CONTROLS AND PREPARE EXISTING CONDUCTORS FOR NEW WORK.
3	ELECTRICAL CONTRACTOR SHALL DISCONNECT EXISTING MECHANICAL EQUIPMENT AS REQUIRED, REMOVED BY OTHERS. REMOVE ALL CONDUIT AND CONDUCTORS TO POINT OR ORIGIN.

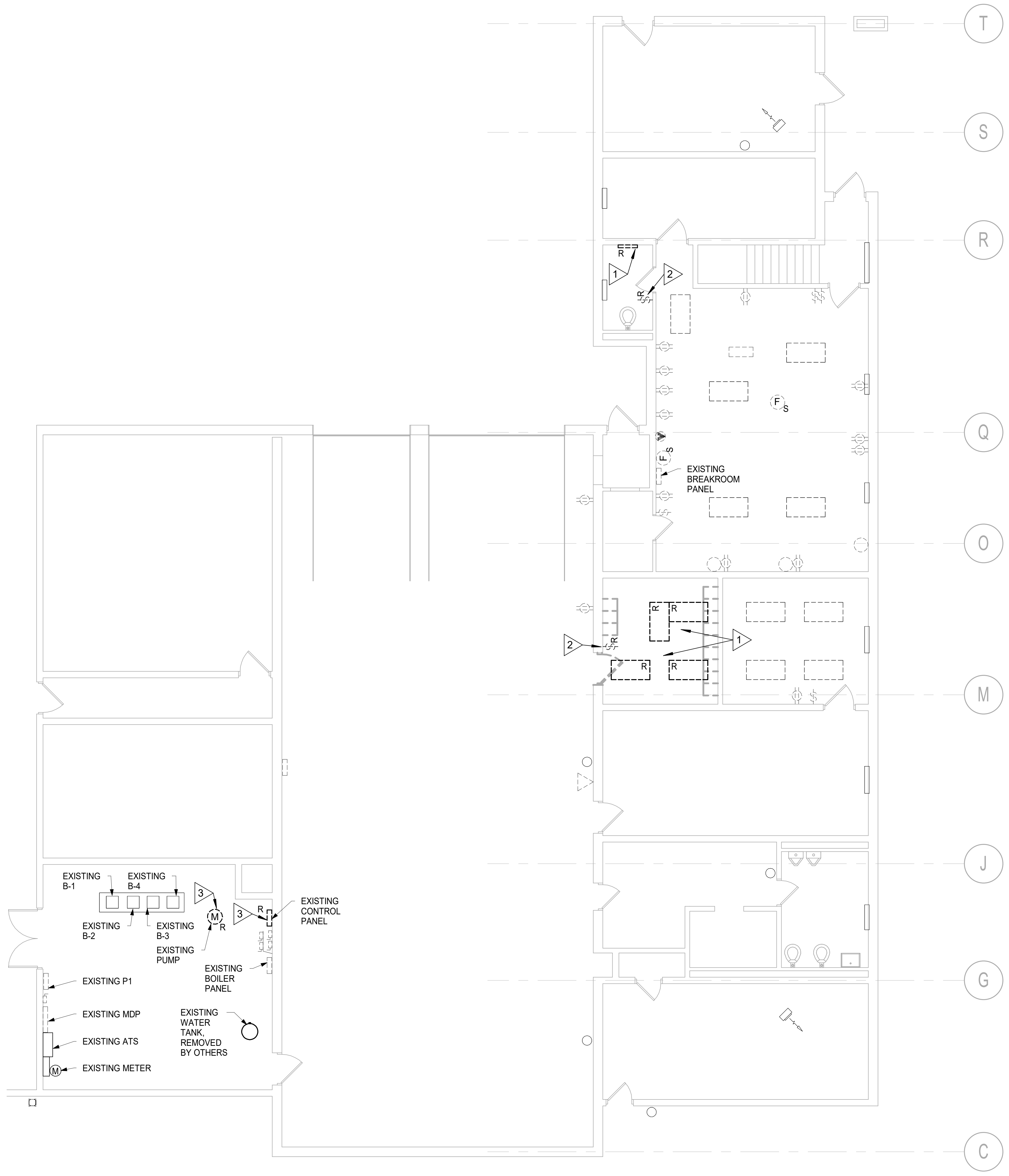

T
S
R
Q
O
M
J
G
C
R
1
2
EXISTING BREAKROOM PANEL
F S
EXISTING B-1
EXISTING B-4
EXISTING B-2
EXISTING B-3
3
M
R
EXISTING PUMP
EXISTING CONTROL PANEL
EXISTING BOILER PANEL
EXISTING P1
EXISTING MDP
EXISTING ATS
EXISTING METER
EXISTING WATER TANK, REMOVED BY OTHERS

1 M2-E101

M2 - ELECTRICAL DEMOLITION PLAN

1/8" = 1'-0"

1/23/2025 10:43:34 AM

REV	DESCRIPTION	BY	DATE

THOMAS P. OFFERLE
No. 10303150

SCO ENGINEERING, LLC
SOLUTIONS PROVIDED • PROBLEMS SOLVED
FORT WAYNE
6534 Constitution Drive
Fort Wayne, IN 46804
(260) 436-9213
(260) 432-5481 fax
scofw@sco-llc.com

JPR
JONES
PETRIE
RAFINSKI
South Bend, IN
p: 574.232.4388
Fort Wayne, IN
p: 260.422.2522

TOLL ROAD MAINTENANCE BARN
M-2: 4504 N. FAIL RD LA PORTE, IN 46350
M-4: 7200 N. 600 W SHIPSHEWANA, IN 46565
M-5: 7565 N. 650 W ORLAND, IN 46776

ITRCC
3200 CASSOPOLIS STREET
ELKHART, IN 46514

M2 ELECTRICAL DEMOLITION PLAN

DESIGNED BY: NLG
REVIEWED BY: TPO
DRAWN BY: NLG
DATE: 1/23/2025 BID SET
JOB NUMBER: 2024-01323
SCALE: 1/8" = 1'-0"

M2-E101

ELECTRICAL PLAN NOTES

1. TERMINATE EXIT, EM, AND EM1 FIXTURES TO LINE SIDE OF RESPECTIVE ROOM LIGHTING CIRCUIT.
2. EQUIPMENT IS PROVIDED AND INSTALLED BY ANOTHER CONTRACTOR. ELECTRICAL CONTRACTOR SHALL REFER TO ARCHITECTURAL, CIVIL, STRUCTURAL, MECHANICAL, AND PLUMBING DRAWINGS SHEETS TO COORDINATE THE EXACT LOCATION OFEQUIPMENT WITH EQUIPMENT PROVIDER. ELECTRICAL CONTRACTOR SHALL TERMINATE EQUIPMENT AS REQUIRED. WHERE NO STARTERS, DISCONNECT, OR SWITCHES ARE INDICATED, THEY WILL BE FACTORY MOUNTED AND LOAD-SIDE WIRED.
3. ELECTRICAL CONTRACTOR SHALL TERMINATE EXHAUST FAN, PROVIDED AND INSTALLED BY OTHERS, TO LIGHTING CIRCUIT AND LIGHTING CONTROLS SERVING AREA.
4. ELECTRICAL CONTRACTOR SHALL TERMINATE NEW LIGHTING FIXTURES AND CONTROLS TO EXISTING LIGHTING CIRCUIT SERVING AREA.

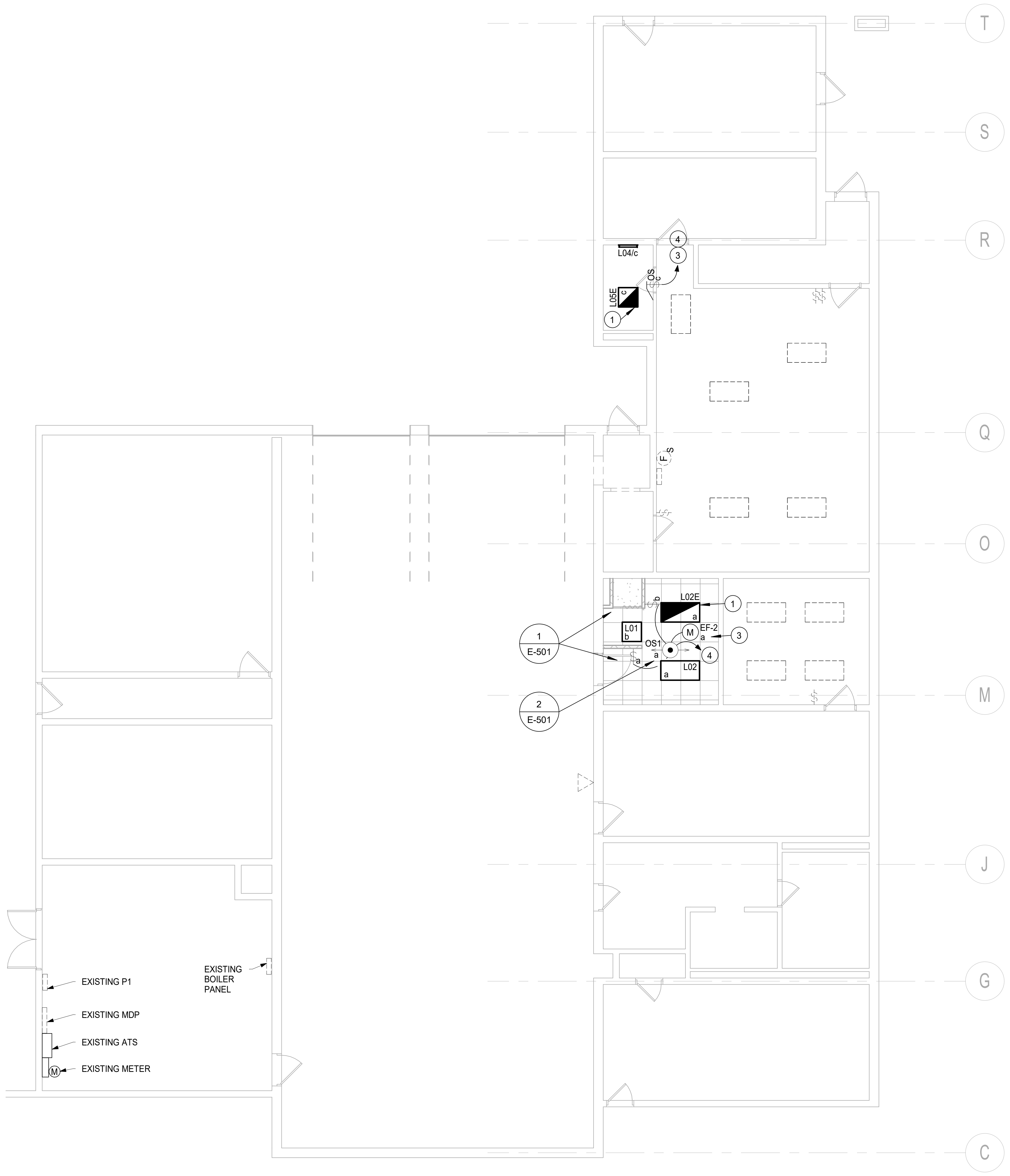
T
S
R
Q
O
M
J
G
C
L04/c
④
③
OS
c
L05E
c
①
F
S
L02E
b
a
①
1
E-501
L01
b
M
EF-2
a
③
OS1
a
④
a
L02
a
2
E-501
EXISTING P1
EXISTING MDP
EXISTING ATS
M
EXISTING METER
EXISTING
BOILER
PANEL

M2 - ELECTRICAL LIGHTING PLAN

2
M2-E102

1/8" = 1'-0"

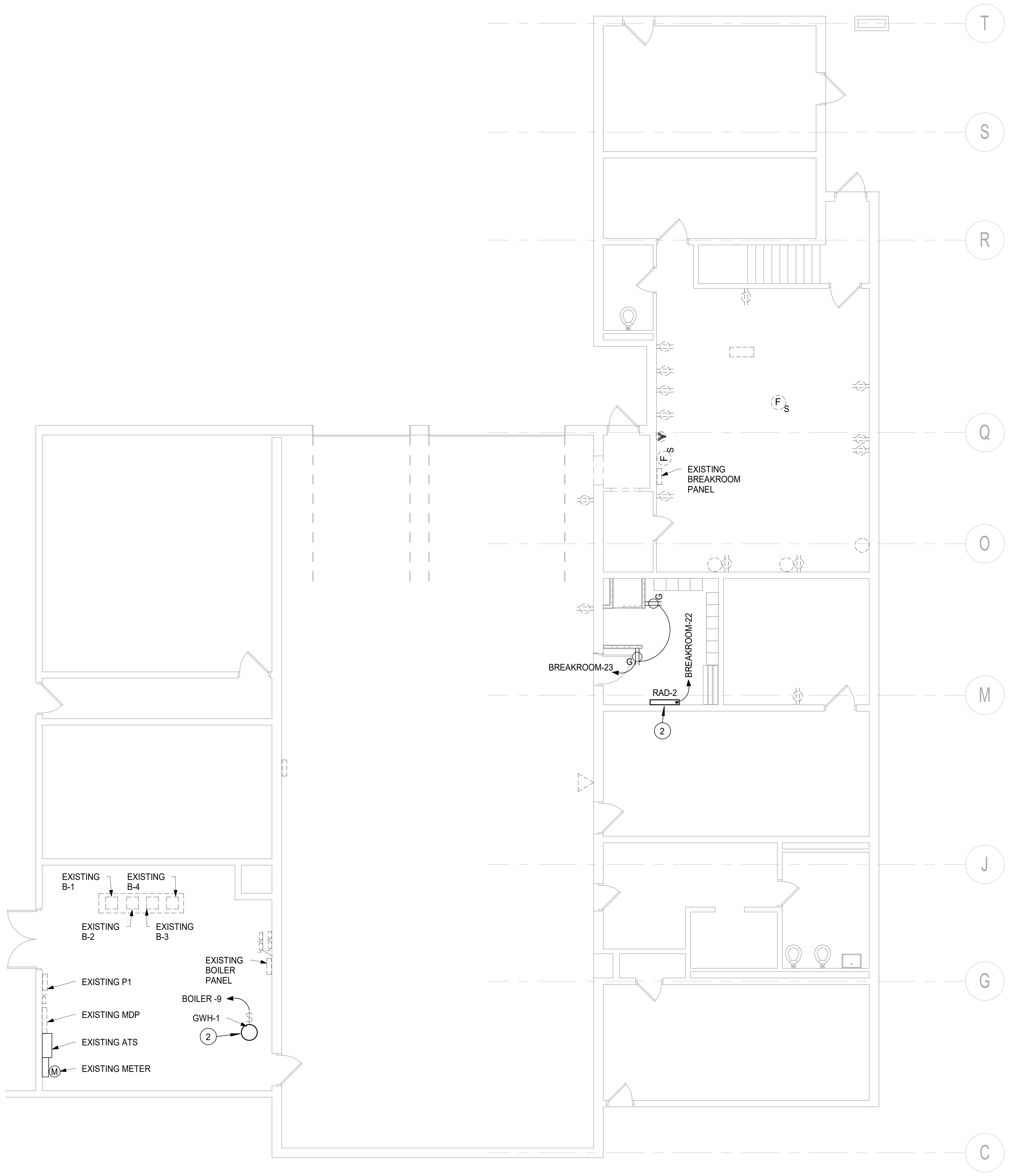
T
S
R
Q
O
M
J
G
C
F
S
F
S
EXISTING
BREAKROOM
PANEL
G
G
BREAKROOM-23
BREAKROOM-22
RAD-2
②
EXISTING
B-1
EXISTING
B-4
EXISTING
B-2
EXISTING
B-3
EXISTING
BOILER
PANEL
BOILER -9
GWH-1
②
EXISTING P1
EXISTING MDP
EXISTING ATS
M
EXISTING METER

M2 - ELECTRICAL POWER PLAN

1
M2-E102

1/8" = 1'-0"

REV	DESCRIPTION	BY	DATE

THOMAS P. OFFERLE
No. 10303150

SCO ENGINEERING, LLC
SOLUTIONS PROVIDED • PROBLEMS SOLVED
FORT WAYNE
6534 Constitution Drive
Fort Wayne, IN 46804
(260) 436-9213
(260) 432-5481 fax
scofw@sco-llc.com

JONES
PETRIE
RAFINSKI
South Bend, IN
p: 574.232.4388
Fort Wayne, IN
p: 260.422.2522

TOLL ROAD MAINTENANCE BARN
M-2: 4504 N. FAIL RD LA PORTE, IN 46350
M-4: 7200 N. 600 W SHIPSHEWANA, IN 46565
M-5: 7565 N. 650 W ORLAND, IN 46776

ITRCC
3200 CASSOPOLIS STREET
ELKHART, IN 46514

M2 ELECTRICAL PLANS

DESIGNED BY:
NLG

REVIEWED BY:
TPO

DRAWN BY:
NLG

DATE: 1/23/2025
BID SET

JOB NUMBER: 2024-01323

SCALE:
1/8" = 1'-0"

M2-E102

1/23/2025 10:43:36 AM

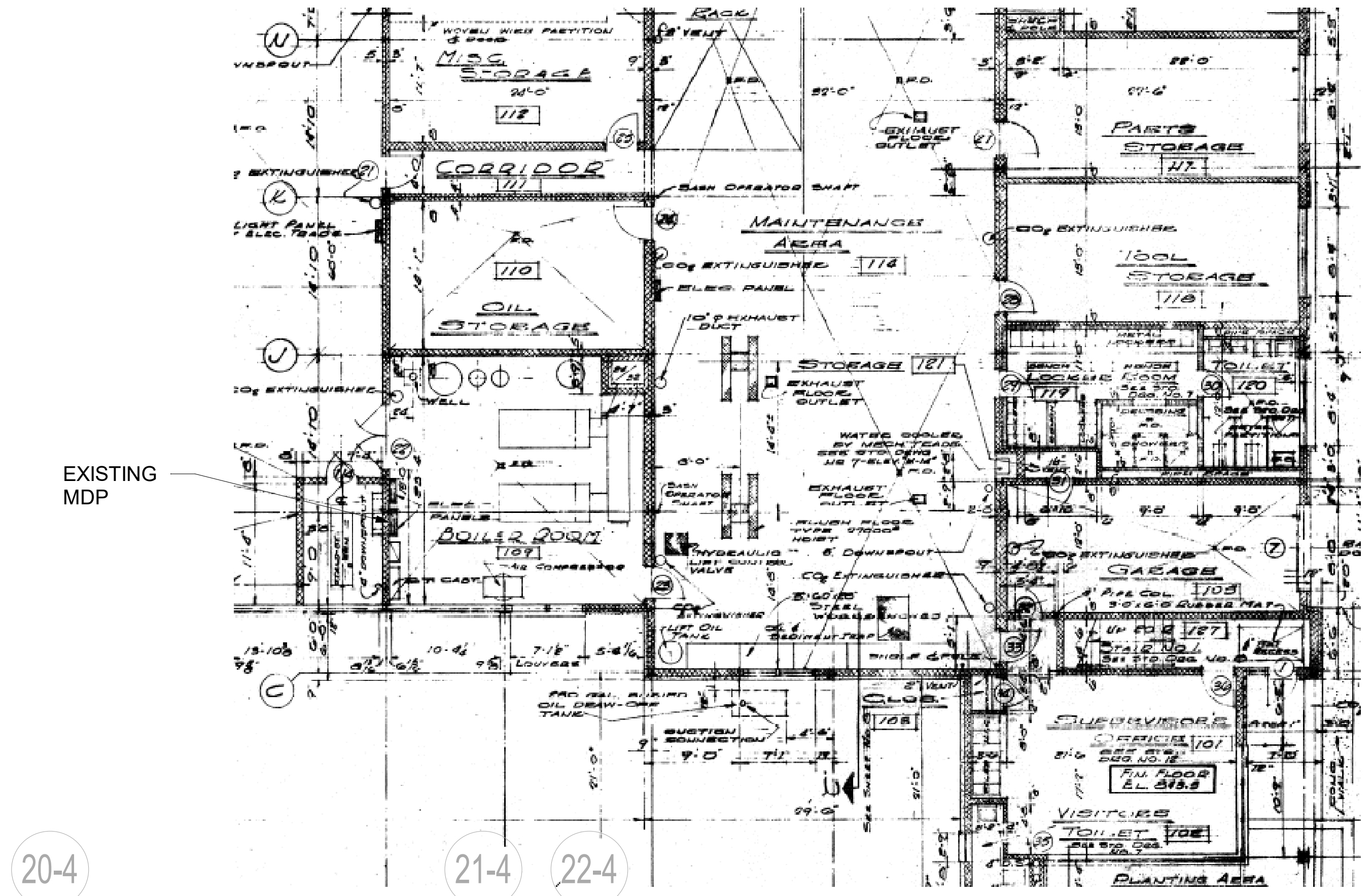
EXISTING
MDP
CORRIDOR
MAINTENANCE AREA
OIL STORAGE
BOILER ROOM
MISC. STORAGE
PARTS STORAGE
TOOL STORAGE
STORAGE
LOCKER ROOM
TOILET
GARAGE
CLOS.
SUPERVISOR'S OFFICE
VISITORS TOILET
PLANTING AREA

PARTIAL KEY PLAN
NOT TO SCALE

ELECTRICAL PLAN NOTES

① TERMINATE EXIT, EM, AND EM1 FIXTURES TO LINE SIDE OF RESPECTIVE ROOM LIGHTING CIRCUIT.

② EQUIPMENT IS PROVIDED AND INSTALLED BY ANOTHER CONTRACTOR. ELECTRICAL CONTRACTOR SHALL REFER TO ARCHITECTURAL, CIVIL, STRUCTURAL, MECHANICAL, AND PLUMBING DRAWINGS SHEETS TO COORDINATE THE EXACT LOCATION OFEQUIPMENT WITH EQUIPMENT PROVIDER. ELECTRICAL CONTRACTOR SHALL TERMINATE EQUIPMENT AS REQUIRED. WHERE NO STARTERS, DISCONNECT, OR SWITCHES ARE INDICATED, THEY WILL BE FACTORY MOUNTED AND LOAD-SIDE WIRED.

③ ELECTRICAL CONTRACTOR SHALL TERMINATE EXHAUST FAN, PROVIDED AND INSTALLED BY OTHERS, TO LIGHTING CIRCUIT AND LIGHTING CONTROLS SERVING AREA.

④ ELECTRICAL CONTRACTOR SHALL ROUTE 2"C, 4-#1, 1-#6; UP WALL AND ACROSS CEILING TO BOILER ROOM FOR TERMINATION TO NEW 100A/3P BREAKER IN EXISTING 'MDP'. REFER TO E601 FOR NEW PANEL SCHEDULES. CONTRACTOR SHALL PROVIDE ALL HARDWARE AND ACCESSORIES FOR A COMPLETE, CODE COMPLIANT, AND FULL FUNCTIONAL SYSTEM. COORDINATE ALL WORK WITH GENERAL CONTRACTOR.

ELECTRICAL DEMOLITION PLAN NOTES

1 ELECTRICAL CONTRACTOR SHALL REMOVE EXISTING LIGHTING FIXTURE AND PREPARE EXISTING CONDUCTORS FOR NEW WORK.

2 ELECTRICAL CONTRACTOR SHALL REMOVE EXISTING LIGHTING CONTROLS AND ASSOCIATED CONDUIT AND CONDUCTOR BACK TO POINT OF ORIGIN.

3 ELECTRICAL CONTRACTOR SHALL REMOVE EXISTING RECEPTACLE AND ASSOCIATED CONDUIT AND CONDUCTOR BACK TO POINT OF ORIGIN.

4 ELECTRICAL CONTRACTOR SHALL REMOVE EXISTING ABANDONDED SURFACE MOUNTED SPEAKER, BACKBOXES, AND CONDUCTORS BACK TO POINT OF ORIGIN.

5 ELECTRICAL CONTRACTOR SHALL DISCONNECT EXISTING MECHANICAL EQUIPMENT AS REQUIRED, REMOVED BY OTHERS. CONTRACTOR SHALL REMOVE CONDUIT AND CONDUCTORS TO POINT OF ORIGIN.

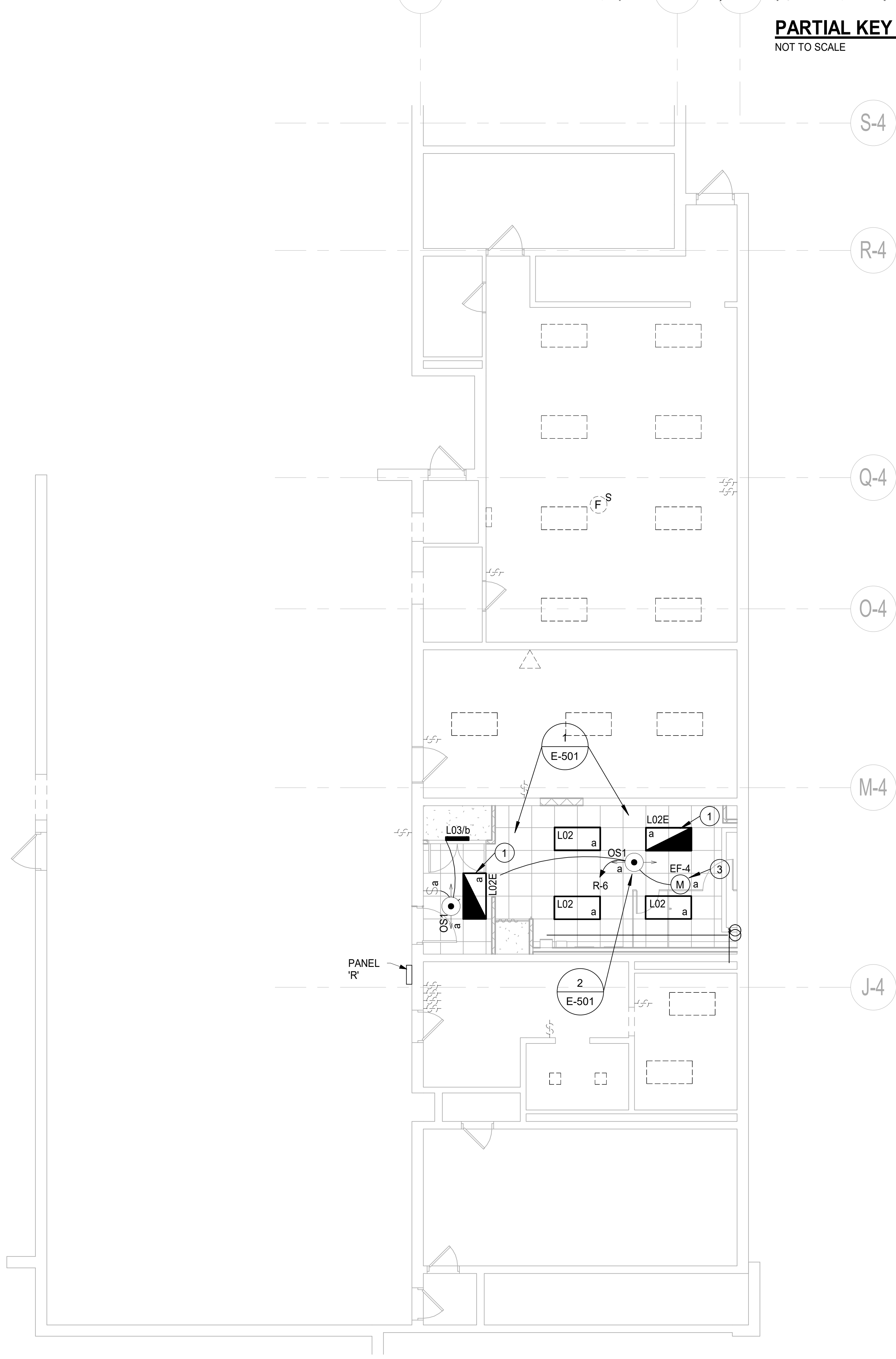
20-4
21-4
22-4
S-4
R-4
Q-4
O-4
M-4
J-4
1
E-501
L03/b
L02E
L02
a
OS1
R-6
EF-4
M
1
3
PANEL
'R'
2
E-501

3 **M4 - ELECTRICAL LIGHTING PLAN**
M4-E101 1/8" = 1'-0"

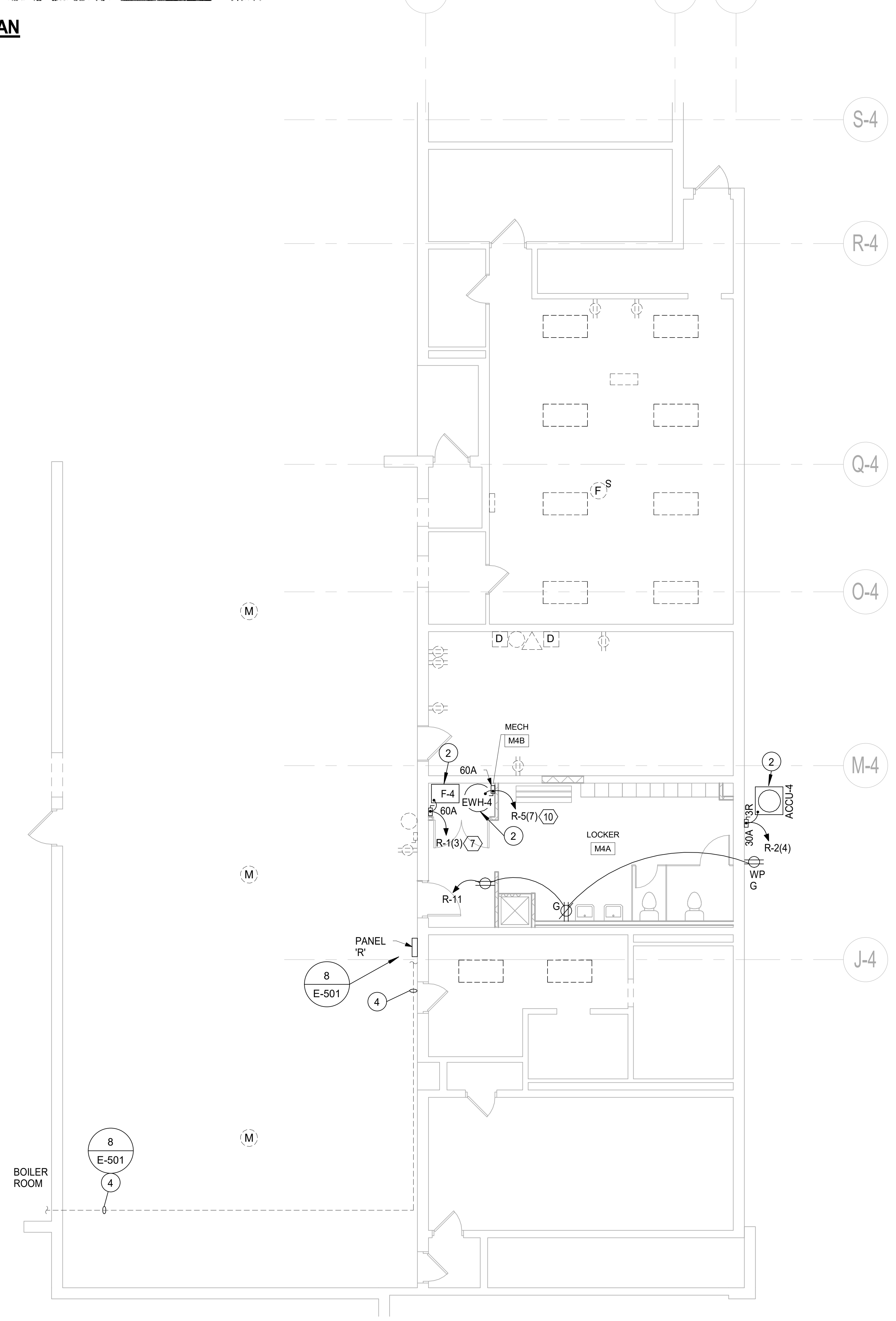
20-4
21-4
22-4
S-4
R-4
Q-4
O-4
M-4
J-4
M
MECH
M4B
2
60A
F-4
EWH-4
60A
R-5(7)
10
R-1(3)
7
2
LOCKER
M4A
2
ACCU-4
3R
30A
R-2(4)
WP
G
R-11
G
PANEL
'R'
8
E-501
4
8
E-501
4
BOILER
ROOM

2 **M4 - ELECTRICAL POWER PLAN**
M4-E101 1/8" = 1'-0"

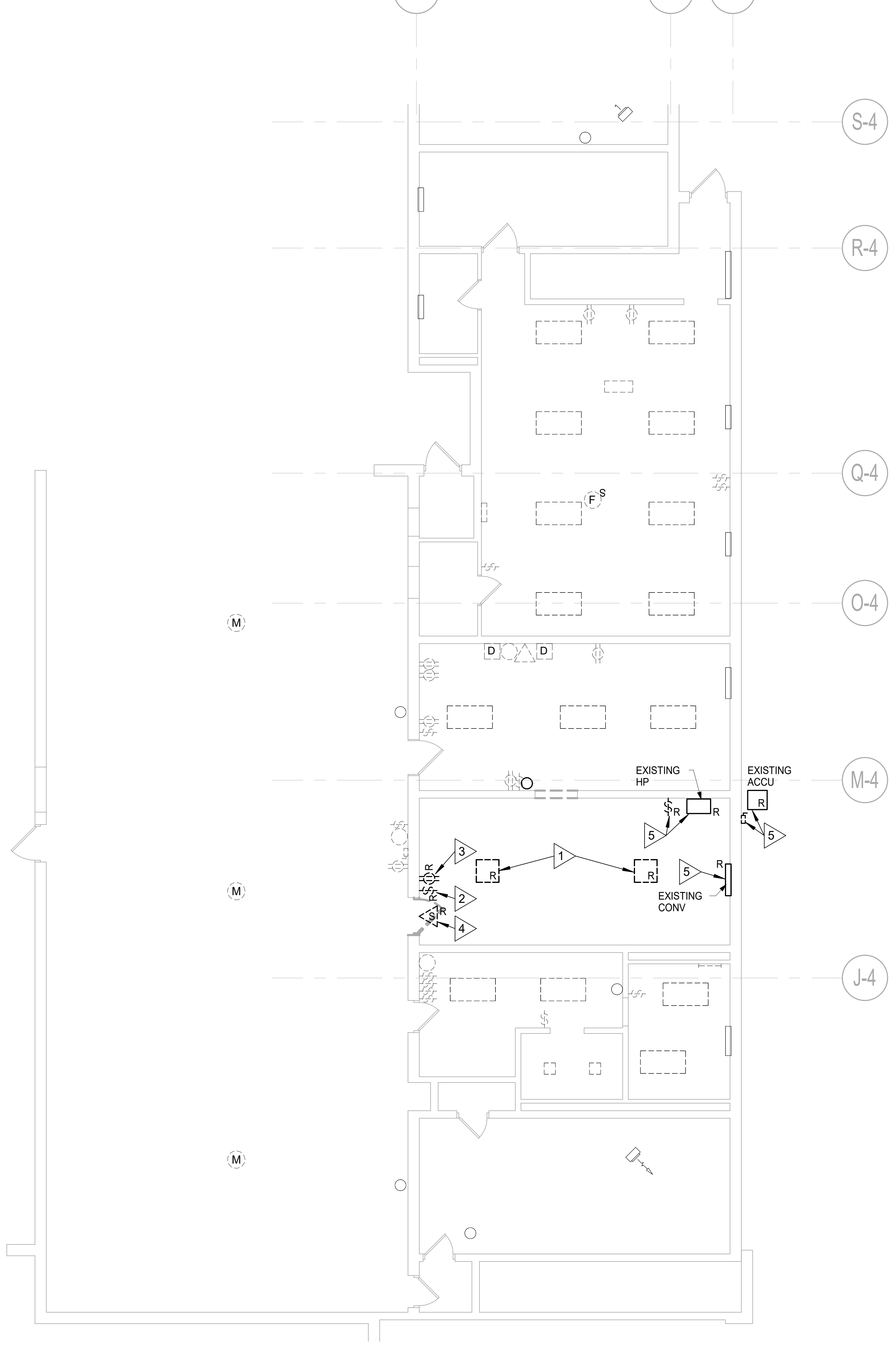
20-4
21-4
22-4
S-4
R-4
Q-4
O-4
M-4
J-4
M
D
EXISTING
HP
EXISTING
ACCU
R
1
2
3
4
5
S
EXISTING
CONV

1 **M4 - ELECTRICAL DEMOLITION PLAN**
M4-E101 1/8" = 1'-0"

1/23/2025 10:43:34 AM

REV	DESCRIPTION	BY	DATE

THOMAS P. OFFERLE
No. 10303150

SCO ENGINEERING, LLC
SOLUTIONS PROVIDED • PROBLEMS SOLVED
FORT WAYNE
6534 Constitution Drive
Fort Wayne, IN 46804
(260) 436-9213
(260) 432-5481 fax
scofw@sco-llc.com

JPR
JONES
PETRIE
RAFINSKI
South Bend, IN
p: 574.232.4388
Fort Wayne, IN
p: 260.422.2522

TOLL ROAD MAINTENANCE BARN

M-2: 4504 N. FAIL RD
M-4: 7200 N. 600 W
M-5: 7565 N. 650 W

LA PORTE, IN 46350
SHIPSHEWANA, IN 46565
ORLAND, IN 46776

ITRCC

3200 CASSOPOLIS STREET
ELKHART, IN 46514

M4 ELECTRICAL PLANS

DESIGNED BY:
NLG

REVIEWED BY:
TPO

DRAWN BY:
NLG

DATE: 1/23/2025
BID SET

JOB NUMBER: 2024-01323

SCALE:
1/8" = 1'-0"

M4-E101

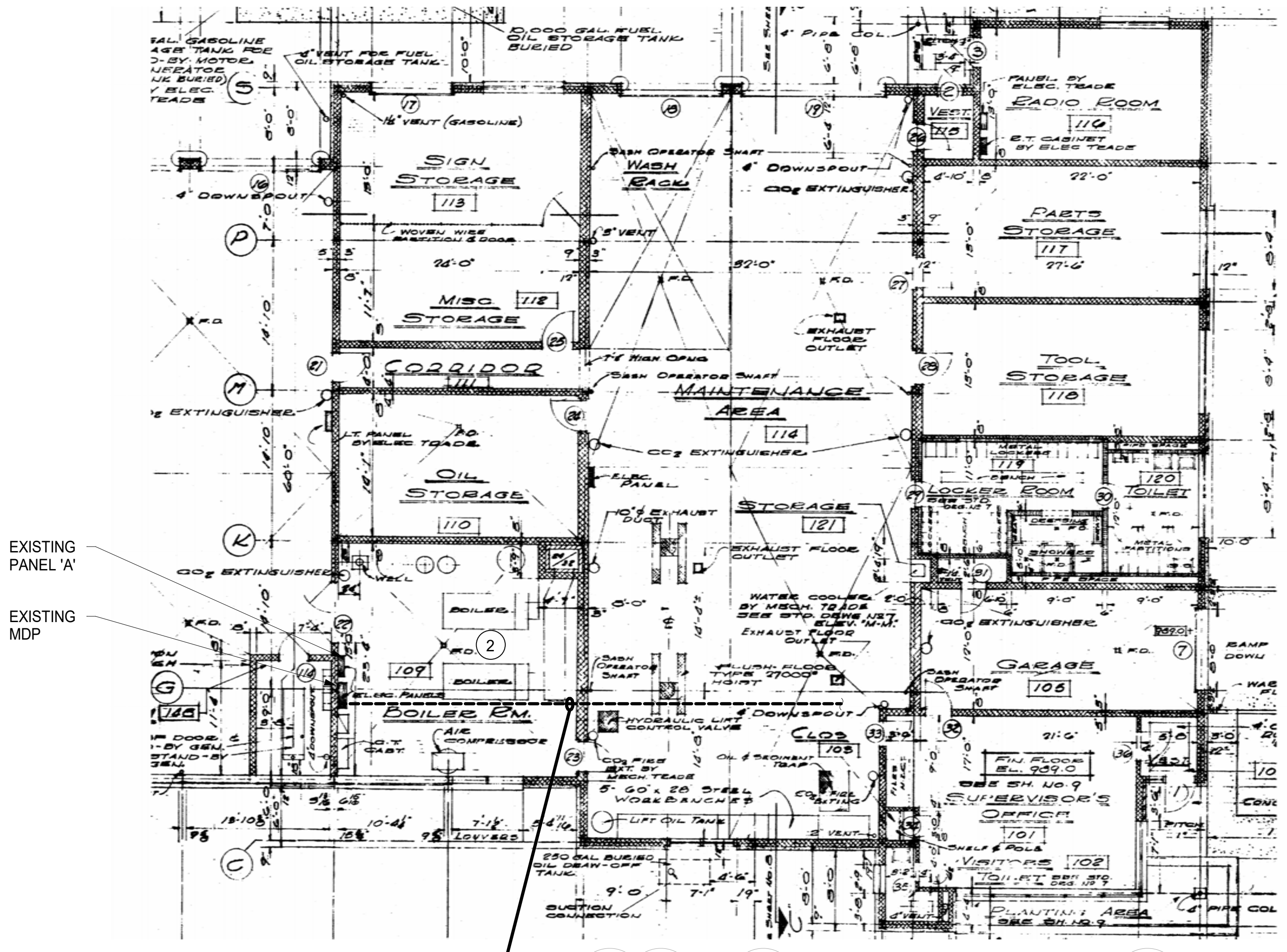

PARTIAL KEY PLAN
NOT TO SCALE

ELECTRICAL PLAN NOTES

1. TERMINATE EXIT, EM, AND EM1 FIXTURES TO LINE SIDE OF RESPECTIVE ROOM LIGHTING CIRCUIT.
2. ELECTRICAL CONTRACTOR SHALL ROUTE 2"C, 3-#1/0, 1-#6; UP WALL AND ACROSS CEILING TO BOILER ROOM FOR TERMINATION TO NEW 150A/3P BREAKER IN EXISTING 'MDP'. REFER TO E601 FOR NEW PANEL SCHEDULES. ELECTRICAL CONTRACTOR SHALL EXTEND ALL RECEPTACLE AND EQUIPMENT CIRCUITS FROM EXISTING PANEL 'OFFICE PANEL' TO NEW PANEL 'OFFICE PANEL (OP)'. CONTRACTOR SHALL PROVIDE ALL HARDWARE AND ACCESSORIES FOR A COMPLETE, CODE COMPLIANT, AND FULL FUNCTIONAL SYSTEM. COORDINATE ALL WORK WITH GENERAL CONTRACTOR.
3. ELECTRICAL CONTRACTOR SHALL EXTEND CONDUIT AND CONDUCTORS TO NEW LOCATION OF EXISTING DISCONNECT AND TERMOSTAT. CONTRACTOR SHALL PROVIDE ALL HARDWARE AND ACCESSORIES FOR A COMPLETE, CODE COMPLIANT, AND FULL FUNCTIONAL SYSTEM. COORDINATE ALL WORK WITH GENERAL CONTRACTOR.
4. EQUIPMENT IS PROVIDED AND INSTALLED BY ANOTHER CONTRACTOR. ELECTRICAL CONTRACTOR SHALL REFER TO ARCHITECTURAL, CIVIL, STRUCTURAL, MECHANICAL, AND PLUMBING DRAWINGS SHEETS TO COORDINATE THE EXACT LOCATION OFEQUIPMENT WITH EQUIPMENT PROVIDER. ELECTRICAL CONTRACTOR SHALL TERMINATE EQUIPMENT AS REQUIRED. WHERE NO STARTERS, DISCONNECT, OR SWITCHES ARE INDICATED, THEY WILL BE FACTORY MOUNTED AND LOAD-SIDE WIRED.
5. ELECTRICAL CONTRACTOR SHALL TERMINATE EXHAUST FAN, PROVIDED AN DINSTALLED BY OTHERS, TO LIGHTING CIRCUIT AND LIGHTING CONTROLS SERVING AREA.

ELECTRICAL DEMOLITION PLAN NOTES

1. ELECTRICAL CONTRACTOR SHALL REMOVE EXISTING LIGHTING FIXTURE. PREPARE EXISTING CONDUCTORS FOR NEW WORK.
2. ELECTRICAL CONTRACTOR SHALL REMOVE EXISTING CARD READER AND ASSOCIATED CONDUIT AND CONDUCTOR BACK TO POINT OF ORIGIN.
3. ELECTRICAL CONTRACTOR SHALL REMOVE EXISTING LIGHTING CONTROLS AND ASSOCIATED CONDUIT AND CONDUCTOR BACK TO POINT OF ORIGIN.
4. ELECTRICAL CONTRACTOR SHALL REMOVE EXISTING RECEPTACLE AND ASSOCIATED CONDUIT AND CONDUCTOR BACK TO POINT OF ORIGIN.
5. ELECTRICAL CONTRACTOR SHALL REMOVE EXISTING DATA BOX AND ASSOCIATED CONDUIT AND CONDUCTOR BACK TO POINT OF ORIGIN.
6. ELECTRICAL CONTRACTOR SHALL REMOVE EXISTING ABANDONDED SURFACE MOUNTED CONDUIT, BACKBOXES, CONDUIT, AND CONDUCTORS BACK TO POINT OF ORIGIN.
7. ELECTRICAL CONTRACTOR SHALL DISCONNECT EXISTING MECHANICAL EQUIPMENT AS REQUIRED, REMOVED BY OTHERS. CONTRACTOR SHALL REMOVED CONDUIT AND CONDUCTORS BACK TO POINT OF ORIGIN.
8. ELECTRICAL CONTRACTOR SHALL DISCONNECT AND REMOVE EXISTING PANEL 'OFFICE PANEL' , CONDUIT, AND CONDUCTORS FEEDING BACK TO THE ORIGINATING SOURCE. CONTRACTOR SHALL CAPTURE EXISTING CONDUCTORS FROM EXISTING CIRCUITS AND PREPARE FOR NEW WORK. REFER TO POWER PLAN THIS SHEET FOR ADDITIONAL INFORMATION.
9. ELECTRICAL CONTRACTOR SHALL DISCONNECT AND REMOVE EXISTING PANEL, DISCONNECT, CONDUCTORS, CONDUIT FOR RELOATION OF DISCONNECT. REFER TO POWER PLAN THIS SHEET AND DETAIL 5/E501 FOR ADDITIONAL INFORMATION OF NEW LOCATION. COORDINATE ALL WORK WITH GENERAL CONTRACTOR.
10. ELECTRICAL CONTRACTOR SHALL DISCONNECT AND REMOVE EXISTING THERMOSTAT, CONDUCTORS, CONDUIT FOR RELOATION OF DISCONNECT. REFER TO POWER PLAN THIS SHEET AND DETAIL 5/E501 FOR ADDITIONAL INFORMATION OF NEW LOCATION. COORDINATE ALL WORK WITH GENERAL CONTRACTOR.
11. ELECTRICAL CONTRACTOR SHALL DISCONNECT EXISTING RECEPTACLE CONDUCTORS AND PREPARE CONDUCTORS FOR NEW WORK.
12. EXISTING EQUIPMENT REMOVED BY OTHERS.

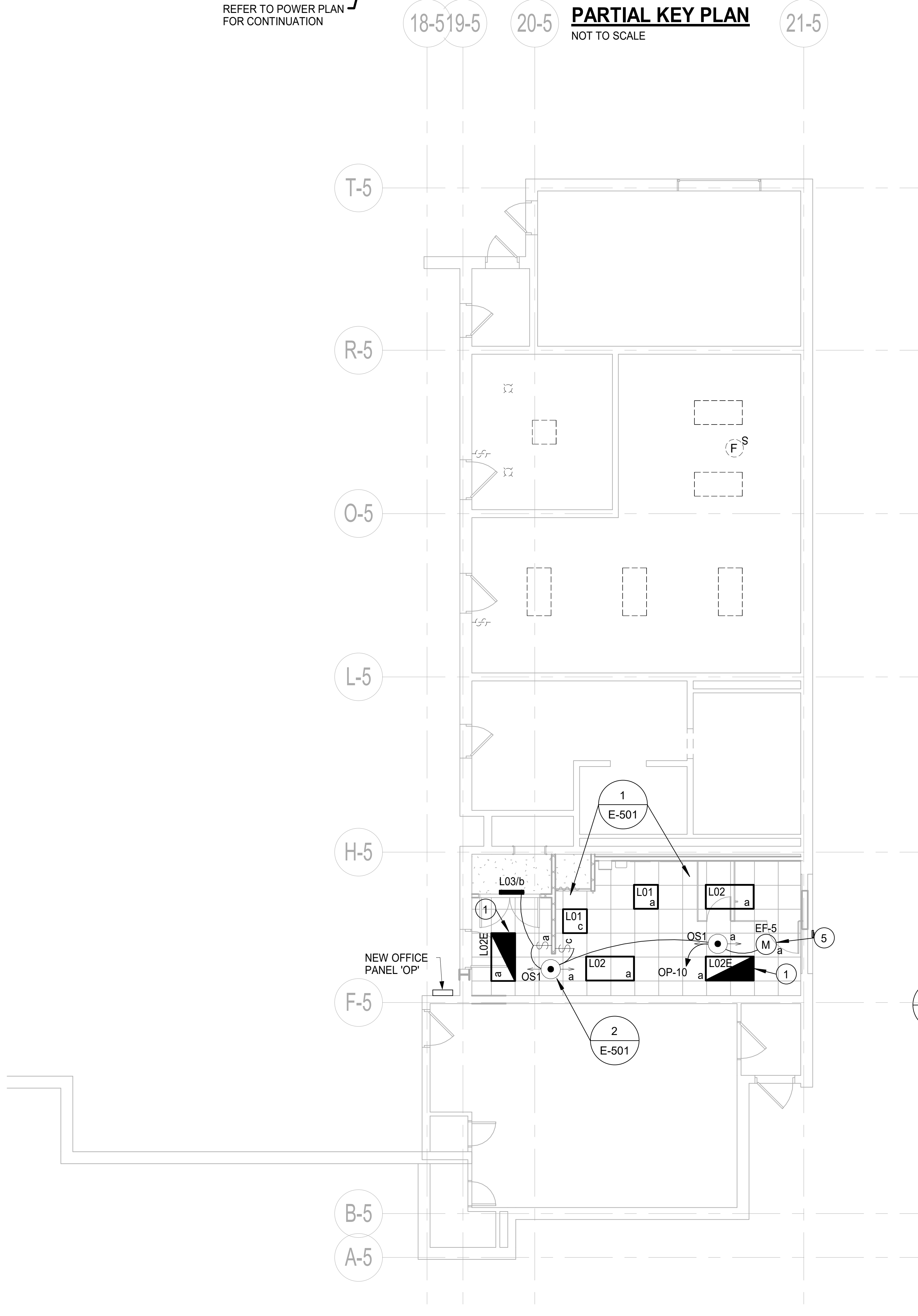

3 M5-E101
M5 - ELECTRICAL LIGHTING PLAN
1/8" = 1'-0"

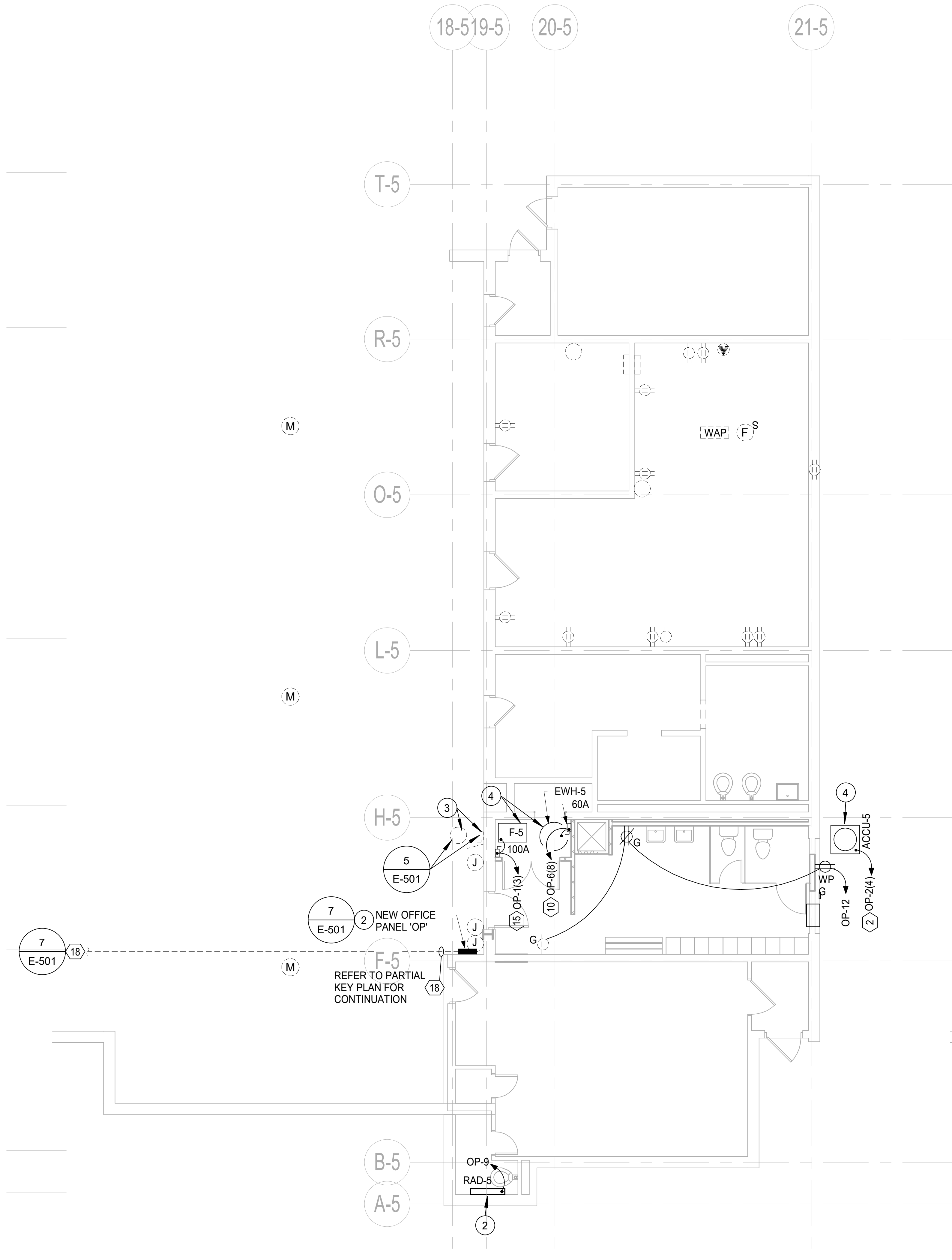

2 M5-E101
M5 - ELECTRICAL POWER PLAN
1/8" = 1'-0"

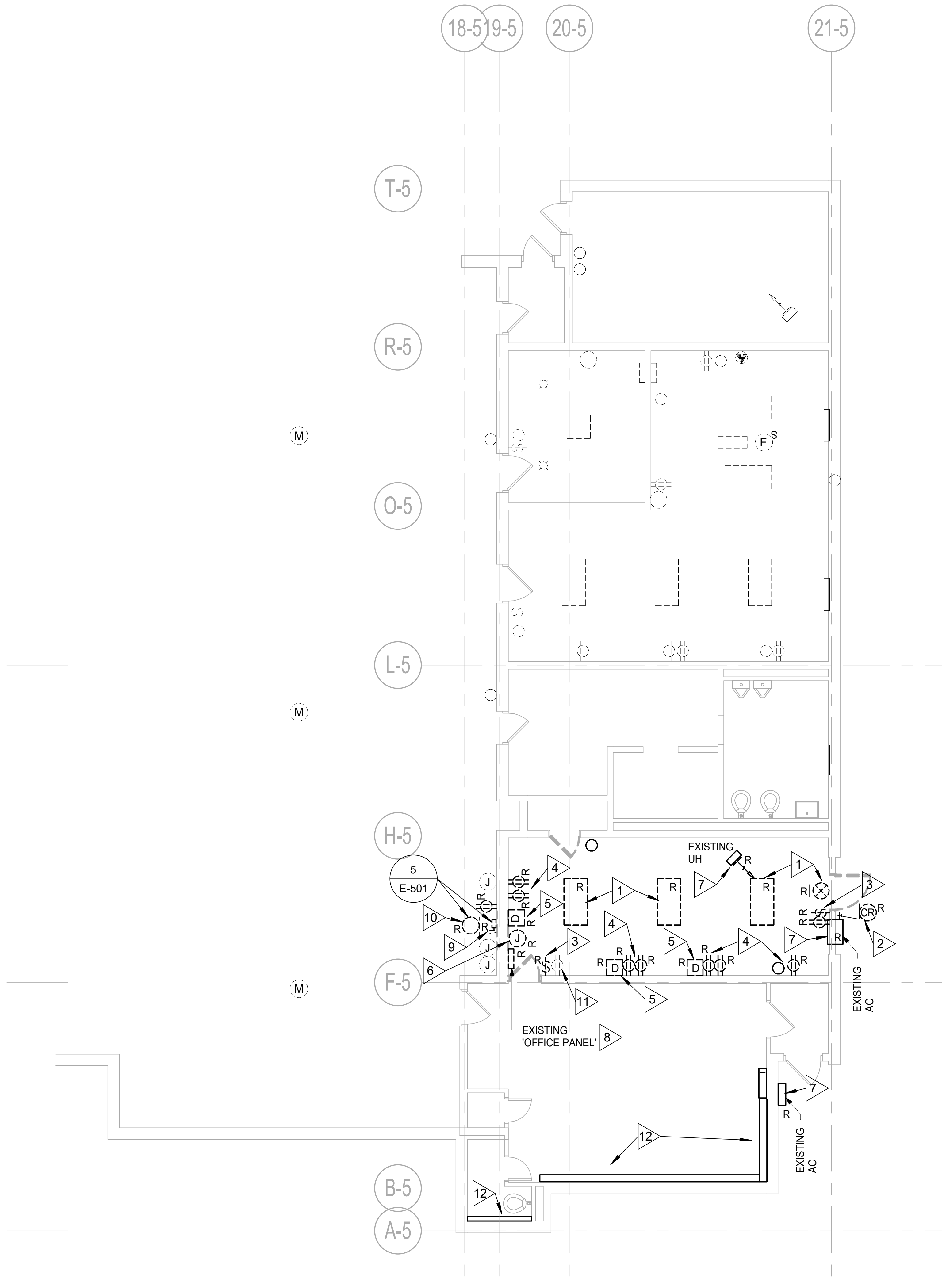

1 M5-E101
M5 - ELECTRICAL DEMOLITION PLAN
1/8" = 1'-0"

REV	DESCRIPTION	BY	DATE

THOMAS P. OFFERLE
REGISTERED No. 10303150 STATE OF INDIANA
PROFESSIONAL ENGINEER

TOffer

SCO ENGINEERING, LLC
SOLUTIONS PROVIDED • PROBLEMS SOLVED
FORT WAYNE
6534 Constitution Drive
Fort Wayne, IN 46804
(260) 436-9213
(260) 432-5481 fax
scofw@sco-llc.com

JONES PETRIE RAFINSKI
South Bend, IN
p: 574.232.4388
Fort Wayne, IN
p: 260.422.2522

TOLL ROAD MAINTENANCE BARN
M-2: 4504 N. FAIL RD LA PORTE, IN 46350
M-4: 7200 N. 600 W SHIPSHEWANA, IN 46565
M-5: 7565 N. 650 W ORLAND, IN 46776

ITRCC
3200 CASSOPOLIS STREET
ELKHART, IN 46514

M5 ELECTRICAL PLANS

DESIGNED BY: NLG
REVIEWED BY: TPO
DRAWN BY: NLG
DATE: 1/23/2025 BID SET
JOB NUMBER: 2024-01323
SCALE: 1/8" = 1'-0"

M5-E101

1/23/2025 10:43:35 AM

POWER CONDUIT AND CONDUCTORS SCHEDULE (CU)

NOTE NO.	CONDUIT, CONDUCTORS, GROUND	NOTE NO.	CONDUIT, CONDUCTORS, GROUND
1	3/4"C, 2-#10, 1-#10	28	3"C, 3-#350KcMil, 1-#4
2	3/4"C, 3-#10, 1-#10	29	3"C, 4-#350KcMil, 1-#4
3	3/4"C, 4-#10, 1-#10	30	4"C, 3-#500KcMil, 1-#3
4	3/4"C, 2-#8, 1-#10	31	4"C, 4-#500KcMil, 1-#3
5	3/4"C, 3-#8, 1-#10	32	4"C, 3-#600KcMil, 1-#3
6	1"C, 4-#8, 1-#10	33	4"C, 4-#600KcMil, 1-#3
7	1"C, 2-#6, 1-#8	34	2 SETS OF (2 1/2"C, 3-#4/0, 1-#2)
8	1"C, 3-#6, 1-#8	35	2 SETS OF (2 1/2"C, 4-#4/0, 1-#2)
9	1 1/4"C, 4-#6, 1-#8	36	2 SETS OF (3"C, 3-#250KcMil, 1-#2)
10	1 1/4"C, 3-#4, 1-#8	37	2 SETS OF (3"C, 4-#250KcMil, 1-#2)
11	1 1/4"C, 4-#4, 1-#8	38	2 SETS OF (3"C, 3-#350KcMil, 1-#1)
12	1 1/4"C, 3-#3, 1-#8	39	2 SETS OF (3"C, 4-#350KcMil, 1-#1)
13	1 1/4"C, 4-#3, 1-#8	40	2 SETS OF (4"C, 3-#500KcMil, 1-#1/0)
14	1 1/4"C, 3-#2, 1-#6	41	2 SETS OF (4"C, 4-#500KcMil, 1-#1/0)
15	1 1/2"C, 4-#2, 1-#6	42	2 SETS OF (4"C, 3-#600KcMil, 1-#1/0)
16	1 1/2"C, 3-#1, 1-#6	43	2 SETS OF (4"C, 4-#600KcMil, 1-#1/0)
17	2"C, 4-#1, 1-#6	44	3 SETS OF (4"C, 3-#350KcMil, 1-#2/0)
18	2"C, 3-#1/0, 1-#6	45	3 SETS OF (4"C, 4-#350KcMil, 1-#2/0)
19	2"C, 4-#1/0, 1-#6	46	3 SETS OF (4"C, 3-#600KcMil, 1-#3/0)
20	2"C, 3-#2/0, 1-#6	47	3 SETS OF (4"C, 4-#600KcMil, 1-#3/0)
21	2"C, 4-#2/0, 1-#6	[SERVICE ENTRANCE SETS]	
22	2"C, 3-#3/0, 1-#6	48	2 SETS OF [4"C, 4-#600KcMil, W/(1) 4" SPARE]
23	2 1/2"C, 4-#3/0, 1-#6	49	3 SETS OF [4"C, 4-#600KcMil, W/(1) 4" SPARE]
24	2 1/2"C, 3-#4/0, 1-#4	50	4 SETS OF [4"C, 4-#600KcMil, W/(1) 4" SPARE]
25	2 1/2"C, 4-#4/0, 1-#4	51	5 SETS OF [4"C, 4-#600KcMil, W/(1) 4" SPARE]
26	2 1/2"C, 3-#250KcMil, 1-#4	52	6 SETS OF [4"C, 4-#600KcMil, W/(1) 4" SPARE]
27	3"C, 4-#250KcMil, 1-#4	53	7 SETS OF [4"C, 4-#750KcMil, W/(1) 4" SPARE]

REFER TO SPECIFICATIONS FOR CONDUIT TYPE REQUIREMENTS PER RESPECTIVE APPLICATION. ALL CONDUCTORS SHALL HAVE FACTORY APPLIED COLOR THE ENTIRE LENGTH OF THE INSULATION TO READILY IDENTIFY IT AS A SPECIFIC PHASE, NEUTRAL, OR EQUIPMENT GROUNDING CONDUCTOR AT ANY POINT ALONG IT'S ENTIRE LENGTH.

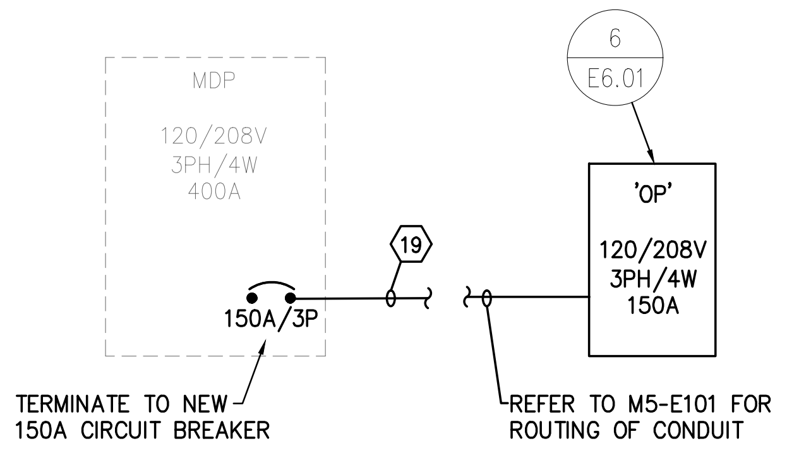
MDP
120/208V
3PH/4W
400A
6
E6.01
'OP'
120/208V
3PH/4W
150A
19
150A/3P
TERMINATE TO NEW 150A CIRCUIT BREAKER
REFER TO M5-E101 FOR ROUTING OF CONDUIT

7 BUILDING M5 RISER DIAGRAM

NOT TO SCALE

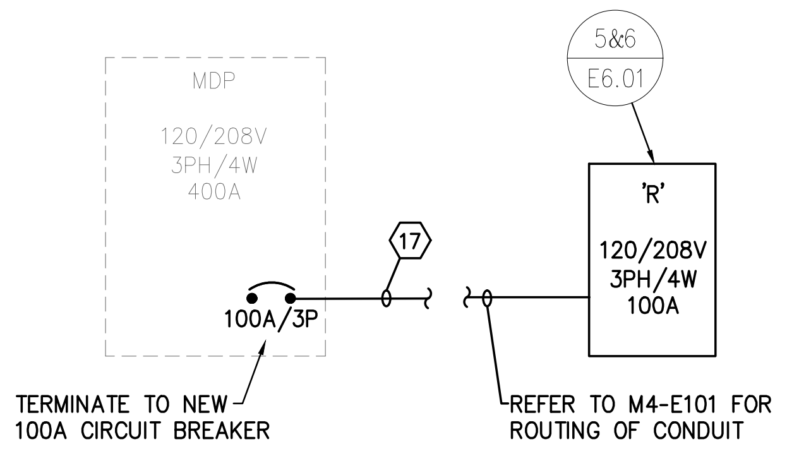
MDP
120/208V
3PH/4W
400A
5&6
E6.01
'R'
120/208V
3PH/4W
100A
17
100A/3P
TERMINATE TO NEW 100A CIRCUIT BREAKER
REFER TO M4-E101 FOR ROUTING OF CONDUIT

8 BUILDING M4 RISER DIAGRAM

NOT TO SCALE

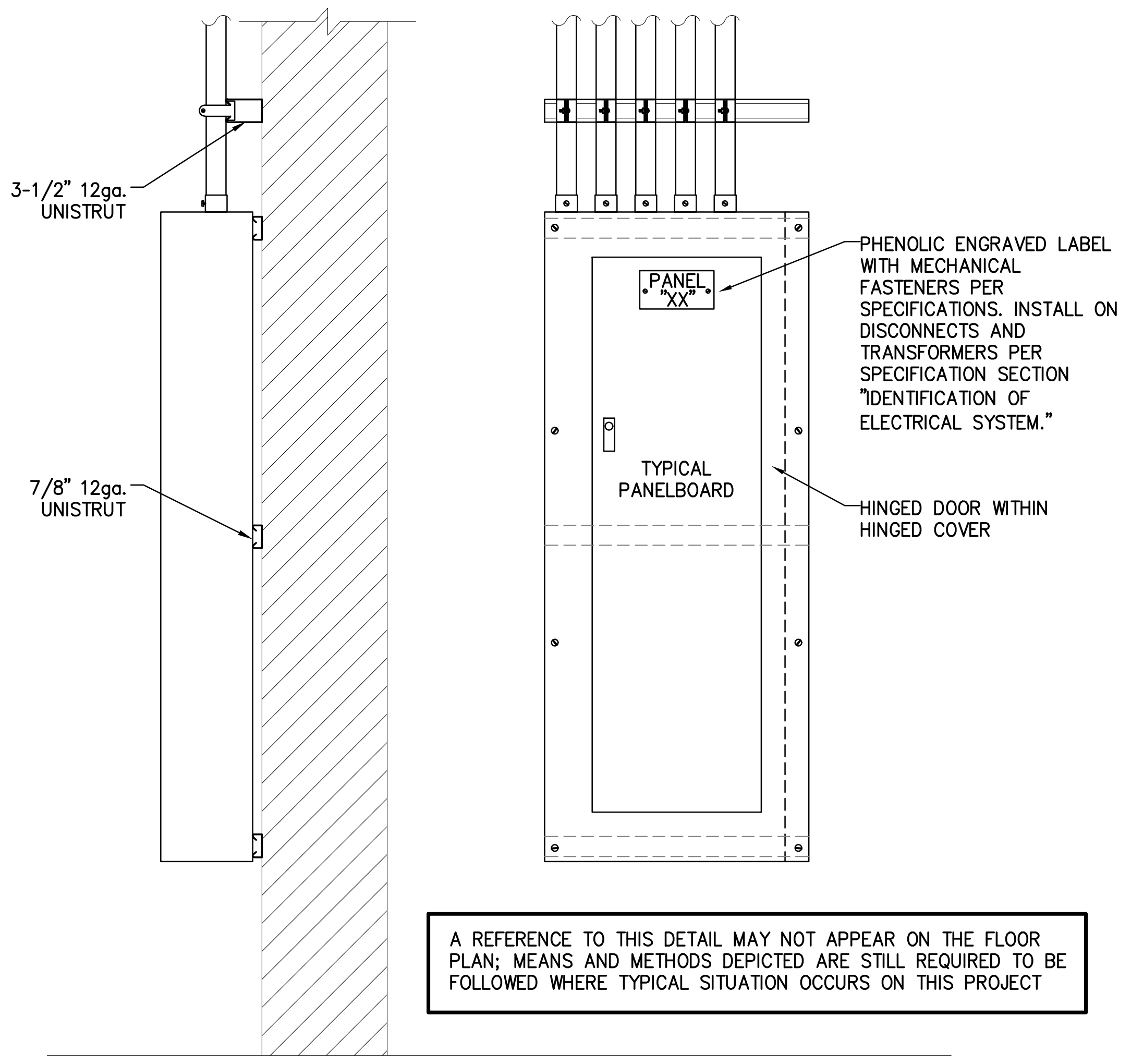
3-1/2" 12ga. UNISTRUT
7/8" 12ga. UNISTRUT
PANEL "XX"
PHENOLIC ENGRAVED LABEL WITH MECHANICAL FASTENERS PER SPECIFICATIONS. INSTALL ON DISCONNECTS AND TRANSFORMERS PER SPECIFICATION SECTION "IDENTIFICATION OF ELECTRICAL SYSTEM."
TYPICAL PANELBOARD
HINGED DOOR WITHIN HINGED COVER

A REFERENCE TO THIS DETAIL MAY NOT APPEAR ON THE FLOOR PLAN; MEANS AND METHODS DEPICTED ARE STILL REQUIRED TO BE FOLLOWED WHERE TYPICAL SITUATION OCCURS ON THIS PROJECT

6 SURFACE MOUNTED PANEL DETAIL

NOT TO SCALE

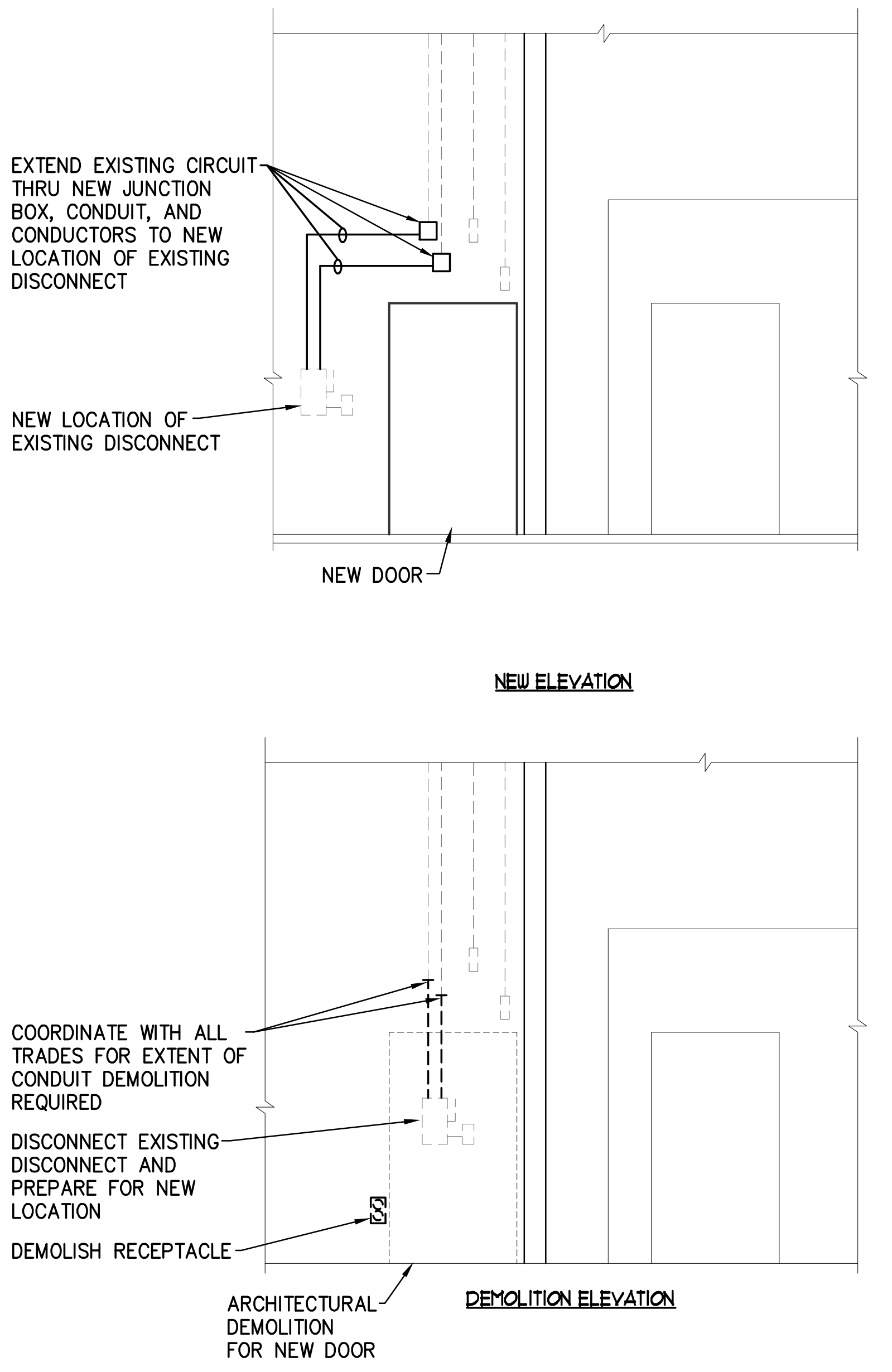
EXTEND EXISTING CIRCUIT THRU NEW JUNCTION BOX, CONDUIT, AND CONDUCTORS TO NEW LOCATION OF EXISTING DISCONNECT
NEW LOCATION OF EXISTING DISCONNECT
NEW DOOR
NEW ELEVATION
COORDINATE WITH ALL TRADES FOR EXTENT OF CONDUIT DEMOLITION REQUIRED
DISCONNECT EXISTING DISCONNECT AND PREPARE FOR NEW LOCATION
DEMOLISH RECEPTACLE
ARCHITECTURAL DEMOLITION FOR NEW DOOR
DEMOLITION ELEVATION

5 M5 ELEVATION DETAIL

NOT TO SCALE

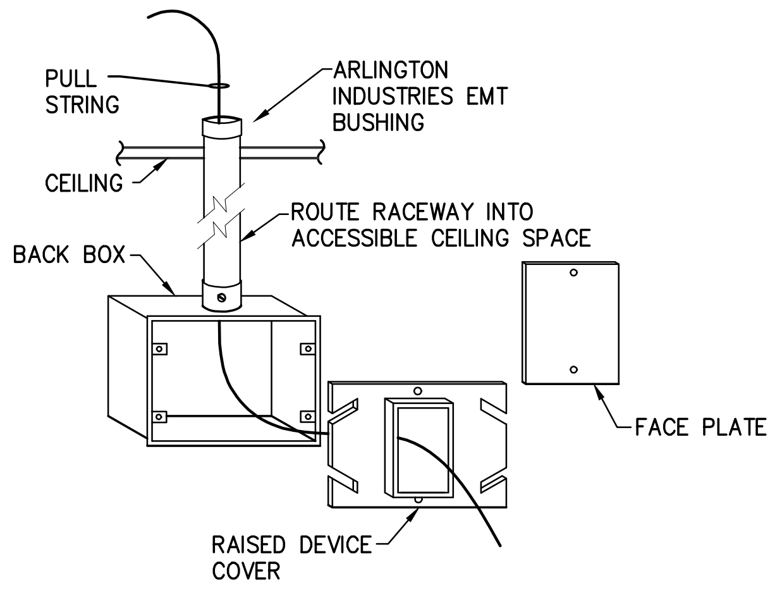
PULL STRING
ARLINGTON INDUSTRIES EMT BUSHING
CEILING
ROUTE RACEWAY INTO ACCESSIBLE CEILING SPACE
BACK BOX
FACE PLATE
RAISED DEVICE COVER

REFER TO JUNCTION BOX SCHEDULE FOR BOX SIZE, COVER CONFIGURATION, FACEPLACE REQUIREMENTS, MOUNTING HEIGHTS, AND RACEWAY SIZE

4 (J) JUNCTION BOX DETAIL

NOT TO SCALE

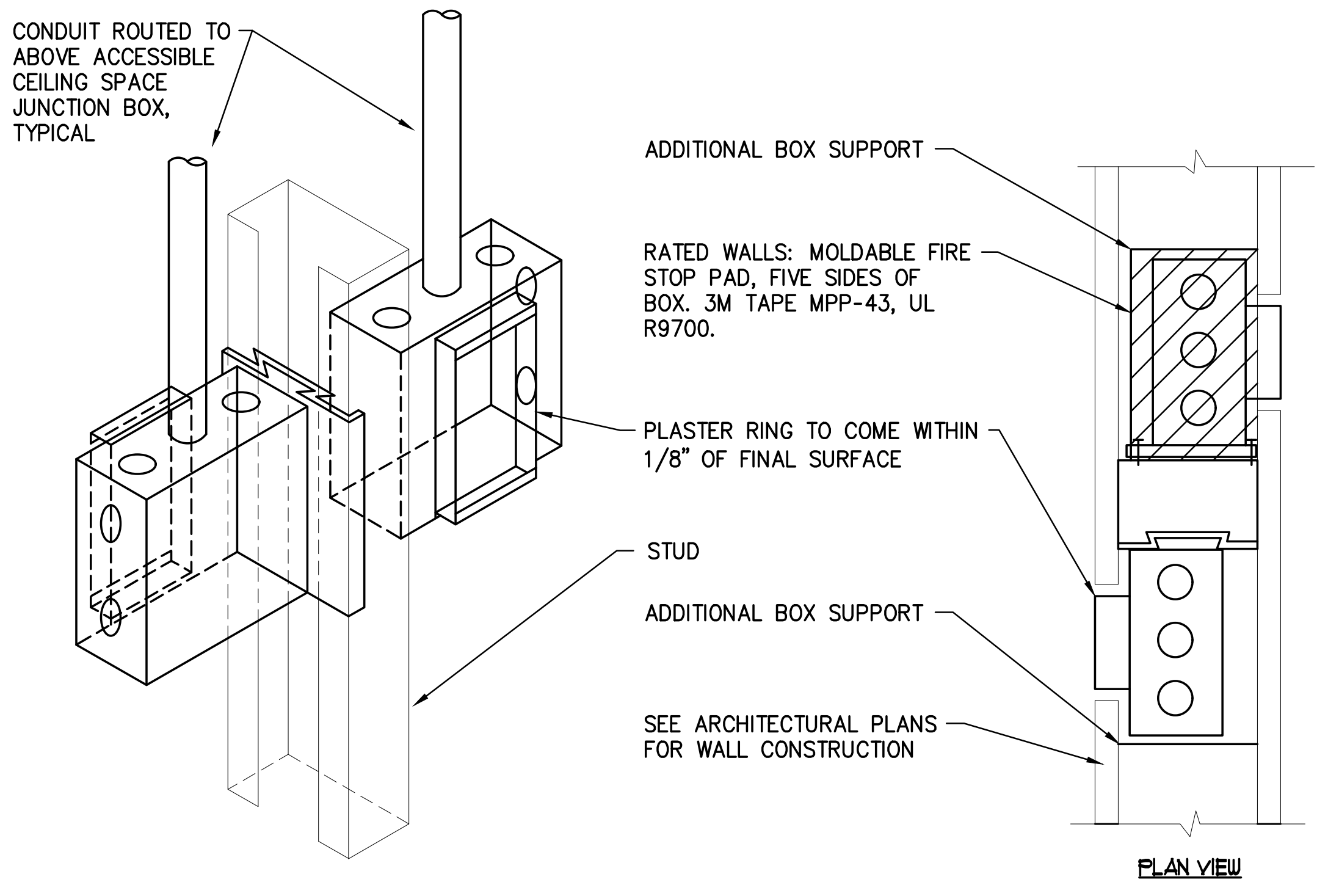
CONDUIT ROUTED TO ABOVE ACCESSIBLE CEILING SPACE JUNCTION BOX, TYPICAL
ADDITIONAL BOX SUPPORT
RATED WALLS: MOLDABLE FIRE STOP PAD, FIVE SIDES OF BOX. 3M TAPE MPP-43, UL R9700.
PLASTER RING TO COME WITHIN 1/8" OF FINAL SURFACE
STUD
ADDITIONAL BOX SUPPORT
SEE ARCHITECTURAL PLANS FOR WALL CONSTRUCTION
PLAN VIEW

CONDUIT ROUTED HORIZONTALLY THRU WALL TO ADJACENT ELECTRICAL DEVICE IS PROHIBITED. EACH ELECTRICAL DEVICE SHALL BE SERVICED VERTICALLY ONLY.

3 SIDE BY SIDE DEVICE OPENINGS

NOT TO SCALE

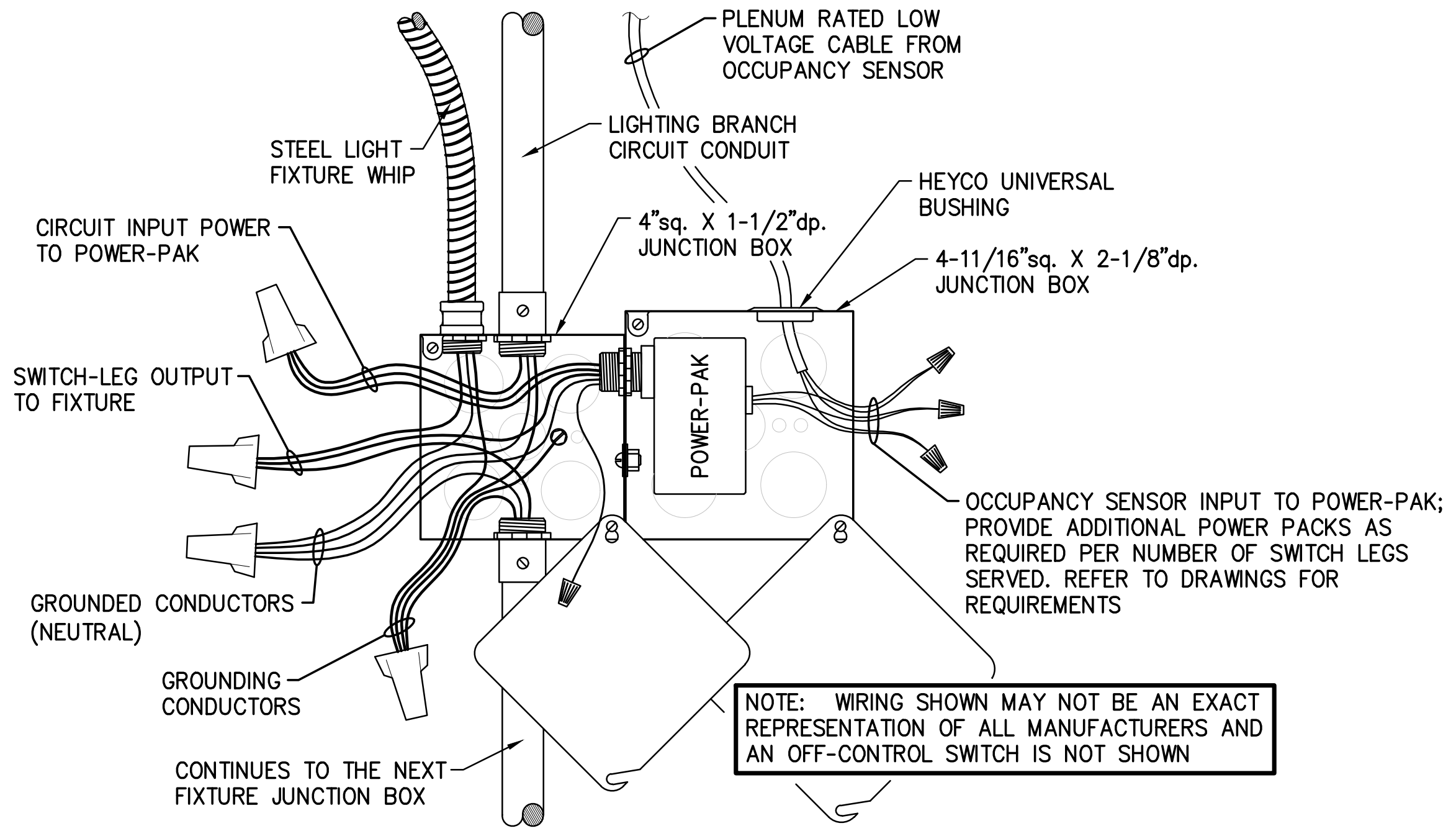
PLENUM RATED LOW VOLTAGE CABLE FROM OCCUPANCY SENSOR
STEEL LIGHT FIXTURE WHIP
LIGHTING BRANCH CIRCUIT CONDUIT
CIRCUIT INPUT POWER TO POWER-PAK
4"sq. X 1-1/2"dp. JUNCTION BOX
HEYCO UNIVERSAL BUSHING
4-11/16"sq. X 2-1/8"dp. JUNCTION BOX
SWITCH-LEG OUTPUT TO FIXTURE
POWER-PAK
OCCUPANCY SENSOR INPUT TO POWER-PAK; PROVIDE ADDITIONAL POWER PACKS AS REQUIRED PER NUMBER OF SWITCH LEGS SERVED. REFER TO DRAWINGS FOR REQUIREMENTS
GROUNDED CONDUCTORS (NEUTRAL)
GROUNDING CONDUCTORS
CONTINUES TO THE NEXT FIXTURE JUNCTION BOX

NOTE: WIRING SHOWN MAY NOT BE AN EXACT REPRESENTATION OF ALL MANUFACTURERS AND AN OFF-CONTROL SWITCH IS NOT SHOWN

2 OCCUPANCY SENSOR POWER-PAK MOUNTING DETAIL

NOT TO SCALE

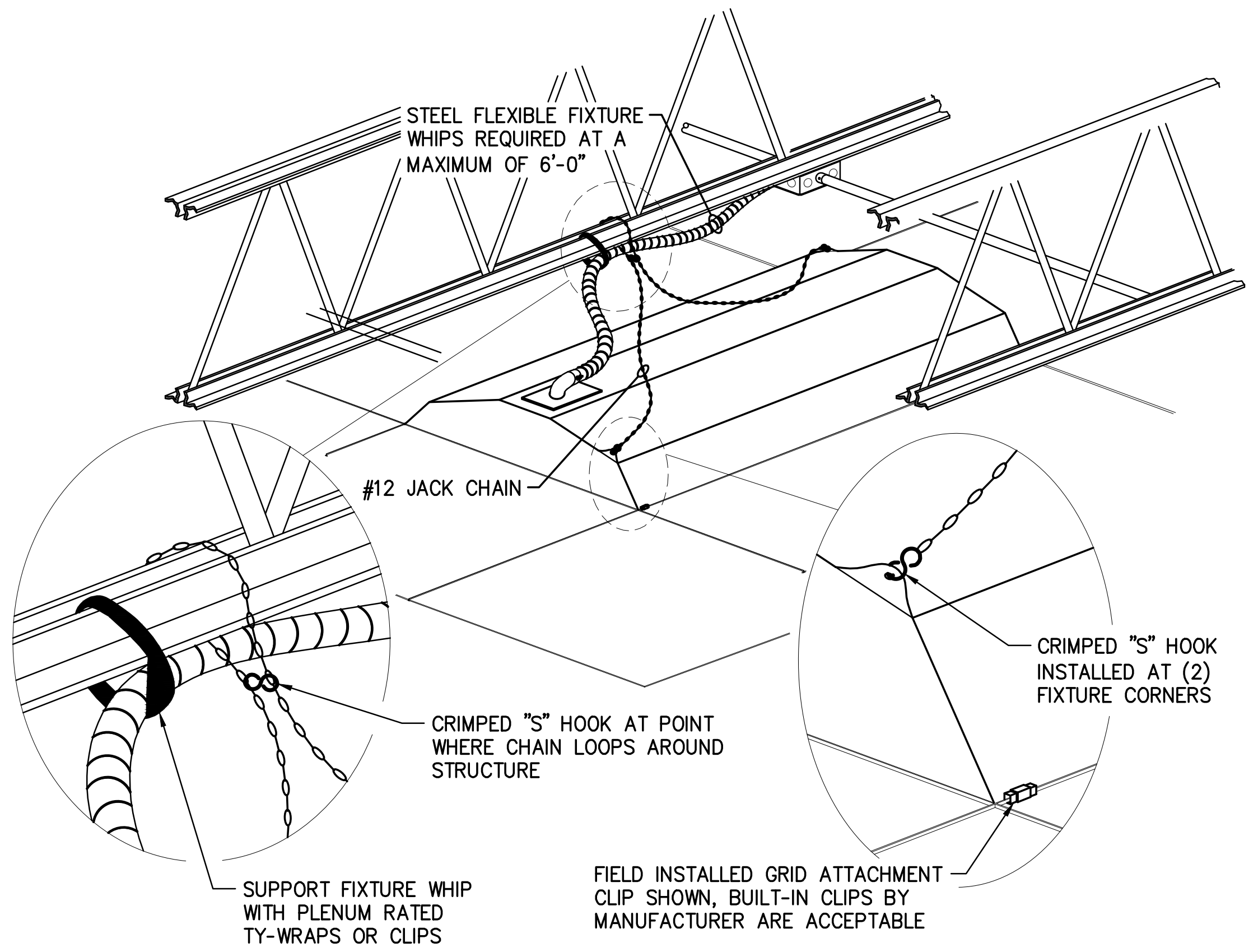
STEEL FLEXIBLE FIXTURE WHIPS REQUIRED AT A MAXIMUM OF 6'-0"
#12 JACK CHAIN
CRIMPED "S" HOOK AT POINT WHERE CHAIN LOOPS AROUND STRUCTURE
CRIMPED "S" HOOK INSTALLED AT (2) FIXTURE CORNERS
SUPPORT FIXTURE WHIP WITH PLENUM RATED TY-WRAPS OR CLIPS
FIELD INSTALLED GRID ATTACHMENT CLIP SHOWN, BUILT-IN CLIPS BY MANUFACTURER ARE ACCEPTABLE

1 LAY-IN FIXTURE INSTALLATION

NOT TO SCALE

REV	DESCRIPTION	BY	DATE

THOMAS P. OFFERLE
REGISTERED No. 10303150
STATE OF INDIANA
PROFESSIONAL ENGINEER

SCO ENGINEERING, LLC
SOLUTIONS PROVIDED • PROBLEMS SOLVED
FORT WAYNE
6534 Constitution Drive
Fort Wayne, IN 46804
(260) 436-9213
(260) 432-5481 fax
scofw@sco-llc.com

JONES PETRIE RAFINSKI
Fort Wayne, IN
p: 260.422.2522
South Bend, IN
p: 574.232.4388

TOLL ROAD MAINTENANCE BARN
4504 N. FAIL RD
7200 N. 600 W
7565 N. 650 W
LA PORTE, IN 46350
SHIPSHEWANA, IN 46565
ORLAND, IN 46776

ITRCC
3200 CASSOPOLIS STREET
ELKHART, IN 46514

ELECTRICAL DETAILS

DESIGNED BY: NLG
REVIEWED BY: TPO
DRAWN BY: NLG
DATE: 1/23/2025
BID SET
JOB NUMBER: 2024-01323
SCALE: As indicated

M2, M4, M5-E501

ALLOWABLE CONDUIT USAGE

CIRCUIT IDENTIFICATION	ALLOWABLE CONDUIT TYPE						
	GRC	IMC	EMT**	RNC*	FLEX	W.P. FLEX	MC CABLE
UNDERGROUND SECONDARY SERVICE ENTRANCE CONDUIT				X			NO
FEEDERS TO SWITCHBOARDS, PANELS, MOTORS, TRANSFORMERS, EXPOSED CONDUIT	X	X	X				NO
CONNECTIONS TO INTERIOR LIGHT FIXTURES & TRANSFORMERS					X		NO
CONNECTIONS TO MOTORS & MOTORIZED EQUIPMENT, INTERIOR & EXTERIOR						X	NO
UNDERGROUND INTERIOR FEEDER CONDUIT				X			NO
BRANCH CIRCUIT WIRING FROM LIGHT FIXTURE TO LIGHT FIXTURE			X				NO
UNDERGROUND EXTERIOR BRANCH CIRCUIT				X			NO
EXPOSED CONDUITS	X	X	X				NO
CONDUITS IN METAL STUD PARTITIONS			X				NO
CONDUITS BURIED IN BLOCK WALLS	X	X	X				NO
CONDUITS ABOVE SUSPENDED CEILINGS	X	X	X				NO
MISC. LOW VOLTAGE SYSTEMS (FIRE ALARM) UP TO 4"C SIZE IN EXPOSED AREAS. PLENUM-RATED CABLE WITH J-HOOK SUSPENSION IS TYPICAL IN CONCEALED SPACES.			X				NO
INTERIOR ABOVE CEILING CONDUITS 3-1/2" AND LARGER EXCEPT AS OTHERWISE PERMITTED	X	X	X				NO

* WITH 3 INCH CONCRETE ENVELOPE UNDER DRIVES AND SIDEWALKS.
** NOT APPROVED FOR EXTERIOR OR EXPOSED BELOW 8 FEET A.F.F.

OCCUPANCY SENSOR SCHEDULE

SYMBOL	MANUFACTURER	MOUNT	COVERAGE REMARKS
OS1 x	SENSOR SWITCH #CM PDT 9	CEILING	DUAL TECHNOLOGY; ISOLATED RELAY; SMALL MOTION: 12ft
OS x	SENSOR SWITCH #WV PDT KIT	WALL	DUAL TECHNOLOGY; WALL MOUNT; SMALL MOTION: 40ft LRG MOTION: 70ft; ISOLATED RELAY
$OS x	SENSOR SWITCH #WSX-PDT	WALL	AUTOMATIC SWITCH-DUAL TECHNOLOGY SWITCH BUTTON; 180°; SMALL MOTION: 20ft - LRG MOTION: 36ft

GENERAL SENSOR NOTES:

ALL SENSORS SHALL HAVE TIME DELAY AND SENSITIVITY ADJUSTMENT CAPABILITIES.

ONE POWER PACK IS REQUIRED FOR EVERY SENSOR.

CEILING MOUNTED OCCUPANCY SENSORS SHOULD BE LOCATED A MINIMUM OF SIX FEET FROM HVAC SUPPLY/RETURN VENTS.

OCCUPANCY SENSORS MOUNTED OVER A DOOR MUST BE PLACED ONE FOOT INSIDE THE THRESHOLD.

ELECTRICAL CONTRACTOR IS RESPONSIBLE FOR ALL SENSITIVITY AND TIME DELAY SETTINGS.

EQUAL MANUFACTURER'S:

SENSOR SWITCH IS THE BASIS OF DESIGN CRITERIA UNDER PARAMETERS LISTED.

ACCEPTED MANUFACTURER'S: GREENGATE, HUBBELL, LUTRON, LEVITON, AND WATT STOPPER, UNLESS NOTED OTHERWISE.

ACCEPTED MANUFACTURER'S SHALL MEET OR EXCEED DESIGN PARAMETERS. IF PARAMETERS CAN NOT BE MATCHED, PROVIDE DETAILED SUBMITTALS FOR ENGINEERING REVIEW AND APPROVAL INDICATING NUMBER OF ADDITIONAL SENSORS REQUIRED TO MEET PARAMETERS WITH A 30% OVERLAP OF COVERAGE. ANY ADDITIONAL SENSORS REQUIRED TO MEET PARAMETERS ALONG WITH ANY REQUIRED HARDWARE, WIRING, ACCESSORIES AND LABOR SHALL BE AT THE EXPENSE OF THE EQUIPMENT SUPPLIER.

PACKAGE SHALL BE SUPPLIED BY SINGLE MANUFACTURER CAPABLE OF MEETING 100% OF SPECIFICATION.

EXTRA MATERIALS:

ELECTRICAL CONTRACTOR SHALL PROVIDE MATERIAL AND LABOR AS REQUIRED FOR THE COMPLETE INSTALLATION OF (2) ADDITIONAL OCCUPANCY SENSORS AND ASSOCIATED POWER PACKS OF EACH TYPE TO BE LOCATED BY THE ENGINEER DURING CONSTRUCTION.

LUMINAIRE SCHEDULE

TYPE	MANUFACTURER'S CATALOG NUMBER	MOUNT	LED		VOLTAGE	INPUT WATTS	REMARKS
			LUMENS	COLOR			
L01	LITHONIA #CPANL 2X2 AL06 SWW7 M2 METALUX, COLUMBIA	GRID	3778	3500K	120	31	CONTRACTOR SHALL PROVIDE AND INSTALL COMPATABLE SWITCHING AND CABLING REQUIRED FOR 0 10V DIMMING, DIMMING DOWN TO 10%
L01E	SAME AS L01 EXCEPT WITH 'ILBLP CP10 HE SD A' BATTERY PACK; TERMINATE TO LINE SIDE OF CIRCUIT SUCH THAT UPON LOSS OF POWER, LAMPS ENERGIZE. BATTERY PACK SHALL BE FACTORY INSTALLED.						
L02	LITHONIA #CPANL 2X4 AL06 SWW7 M2 METALUX, COLUMBIA	GRID	4363	3500K	120	36	CONTRACTOR SHALL PROVIDE AND INSTALL COMPATABLE SWITCHING AND CABLING REQUIRED FOR 0 10V DIMMING, DIMMING DOWN TO 10%
L02E	SAME AS L02 EXCEPT WITH 'ILBLP CP10 HE SD A' BATTERY PACK; TERMINATE TO LINE SIDE OF CIRCUIT SUCH THAT UPON LOSS OF POWER, LAMPS ENERGIZE. BATTERY PACK SHALL BE FACTORY INSTALLED.						
L03	LITHONIA #WL2 12L GZ10 LP835 MSD7 METALUX, COLUMBIA	WALL	2121	3500K	120	21	CONTRACTOR SHALL PROVIDE AND INSTALL COMPATABLE SWITCHING AND CABLING REQUIRED FOR 0 10V DIMMING, DIMMING DOWN TO 10%
L04	LITHONIA #FMVTSL 36IN MVOLT 30K 90CRI BN METALUX, COLUMBIA	WALL	2009	3000K	120	25	CONTRACTOR SHALL PROVIDE AND INSTALL COMPATABLE SWITCHING AND CABLING REQUIRED FOR 0 10V DIMMING, DIMMING DOWN TO 10%
L05E	LITHONIA #CPANL 2X2 AL06 SWW7 M2 DCMK224 ILBLP CP10 HE SD A METALUX, COLUMBIA	SURFACE	3778	3500K	120	31	
EM	LITHONIA #ELM6 LED HO SD DUAL LITE, SURE LITE	WALL		-	120/277	5	
EX	LITHONIA #LQM S W R ELN SD DUAL LITE, SURE LITE	UNIVERSAL		RED	120/277	1.5	

THESE REMARKS APPLY TO ALL LUMINAIRE TYPES:

- LUMINAIRES HAVE BEEN SPECIFIED ON A PERFORMANCE BASIS.
- LUMINAIRES LISTED ARE APPROVED, EQUALS MUST BE SUBMITTED FOR APPROVAL PRIOR TO BID.

•• LUMINAIRE SHALL BE COMPARABLE IN APERTURE SIZE
•• LED'S SHALL HAVE THE SAME KELVIN TEMPERATURE
•• LUMINAIRE SHALL MEET OR EXCEED THE LUMEN OUTPUT OF SPECIFIED LUMINAIRE
•• LUMINAIRE SHALL NOT EXCEED THE WATTAGE BY MORE THAN 10%
•• PROVIDED SUBMITTAL SHALL INCLUDE INFORMATION ON LM-79/LM-80 TESTING, NUMBER OF LED'S AND ENGINES, DRIVER INFORMATION (INCLUDING DRIVE CURRENT), SYSTEM WATTAGE, AND WARRANTY INFORMATION
•• ANY APPROVED LUMINAIRES SHALL BE LISTED DURING THE ADDENDA PROCESS. NO VERBAL APPROVALS SHALL BE GIVEN OR ACKNOWLEDGED.

- REFER TO FLOOR PLAN FOR SINGLE OR DUAL SWITCHING REQUIREMENTS
- LISTED EMERGENCY BATTERY PACKS/TRANSFER DEVICES SHALL BE FACTORY MOUNTED WITHIN LUMINAIRE AND TERMINATED AS REQUIRED
- TEST SWITCHES FOR EM FIXTURES WHICH ARE NOT INTEGRAL TO THE FIXTURES SHALL BE MOUNTED VISIBLY ADJACENT TO THE FIXTURE.
- UNLESS SPECIFICALLY NOTED, LED DRIVERS SHALL BE INTERNAL TO THE FIXTURE, NOT REMOTE
- FIXTURES SHALL BE SUPPLIED WITH FACTORY INSTALLED WHIPS.
- ADDITIONAL EXITS AND EMERGENCY LIGHTING MAY BE REQUIRED PENDING AHJ REVIEW, ELECTRICAL CONTRACTOR SHALL PROVIDE AND INSTALL ADDITIONAL FIXTURES AS REQUIRED.
- MATERIAL ALLOWANCES LISTED ARE ONLY FOR THE COST OF THE LUMINAIRE OR LUMINAIRE COMBINATION AS NOTED.
- BASE BID SHALL INCLUDE ALL HARDWARE, CONDUIT, WIRE AND LABOR NEEDED FOR A COMPLETE AND FUNCTIONAL INSTALLATION OF ALL LUMINAIRES.
- ELECTRICAL CONTRACTOR SHALL MOUNT ALL SURFACE MOUNTED EXIT LIGHTS 6 INCHES ABOVE DOOR HEADER.
- ELECTRICAL CONTRACTOR IS RESPONSIBLE TO VERIFY EXISTING EXIT SIGN COLOR IN EXISTING BUILDING, AND ENSURE THAT ANY EXIT SIGNS THAT ARE ADDED/REPLACED IN THE BUILDING SHALL MATCH EXISTING EXIT SIGN COLOR.

PANEL: BOILER
TYPE: NQ
MOUNT: SURFACE
REMARKS: **M2 BUILDING ; BOLD INDICATES NEW CIRCUIT BREAKER(S)**
VOLTAGE: 208Y/120, 3ø, 4W
MLO: 225A
AIC:

CKT NO.	BREAKER SIZE	LOAD DESCRIPTION	PHASE A (KVA)	PHASE B (KVA)	PHASE C (KVA)	LOAD DESCRIPTION	BREAKER SIZE	CKT NO.
1	20A/1P	PUMP #1				UH GARAGE NORTH	20A/1P	2
3	20A/1P	PUMP #2				UH GARAGE MID	20A/1P	4
5	20A/1P	PUMP #3				UH GARAGE SOUTH	20A/1P	6
7	20A/1P	PUMP #4				OFFICE PANEL	60A/3P	8
9	**20A/1P**	**GWH-1**		**1.00**				10
11	20A/1P	BOILER #4				SPACE	1P	12
13	20A/1P	BOILER CTRL PNL				SPACE	1P	14
15	20A/1P	BOILER 1,2,3				SPACE	1P	16
17	30A/2P	HOIST				SPACE	1P	18
19						SPACE	1P	20
21	1P	SPACE				SPACE	1P	22
23	1P	SPACE				SPACE	1P	24
25	1P	SPACE				SPACE	1P	26
27	1P	SPACE				SPACE	1P	28
29	1P	SPACE				SPACE	1P	30
31	1P	SPACE				SPACE	1P	32
33	1P	SPACE				SPACE	1P	34
35	1P	SPACE				SPACE	1P	36
37	1P	SPACE				SPACE	1P	38
39	1P	SPACE				SPACE	1P	40
41	1P	SPACE				SPACE	1P	42

PANEL: BREAKROOM
TYPE: NQ
MOUNT: SURFACE
REMARKS: **M2 BUILDING ; BOLD INDICATES NEW CIRCUIT BREAKER(S)**
VOLTAGE: 208Y/120, 3ø, 4W
MLO: 225A
AIC:

CKT NO.	BREAKER SIZE	LOAD DESCRIPTION	PHASE A (KVA)	PHASE B (KVA)	PHASE C (KVA)	LOAD DESCRIPTION	BREAKER SIZE	CKT NO.
1	20A/1P	L: LOUNGE				R: S. BEDROOM	20A/1P	2
3	20A/1P	R: CONF. RM				R: S. BEDROOM	20A/1P	4
5	20A/1P	L: N. BEDROOM				R: STORAGE/RR	20A/1P	6
7	20A/1P	EF N. BEDROOM				AIR HANDLER	20A/1P	8
9	20A/1P	R: E. BREAKROOM				R: PATROL ROOM	20A/1P	10
11	20A/1P	R: PATROL ROOM				R: TOILET 2ND FLR	20A/1P	12
13	30A/2P	A/C				A/C - ROOM E	20A/1P	14
15						A/C - ROOM D	20A/1P	16
17	20A/1P	EXISTING				R: BREAKROOM	20A/1P	18
19	50A/2P	EXISTING				L: BREAKROOM	20A/1P	20
21				**0.50**		**RAD-2**	**20A/1P**	**22**
23	**20A/1P**	**R: WOMENS RR**			**0.40**	SPACE	1P	24
25	1P	SPACE				SPACE	1P	26
27	1P	SPACE				SPACE	1P	28
29	1P	SPACE				SPACE	1P	30

PANEL: MDP
TYPE: P1
MOUNT: SURFACE
REMARKS: **BUILDING M4 ; BOLD INDICATES NEW CIRCUIT BREAKER(S)**
VOLTAGE: 208Y/120, 3ø, 4W
MLO: 400A
AIC: 10K

CKT NO.	BREAKER SIZE	LOAD DESCRIPTION	PHASE A (KVA)	PHASE B (KVA)	PHASE C (KVA)	LOAD DESCRIPTION	BREAKER SIZE	CKT NO.
-	200A/3P	PANEL P-1				PANEL G1	200A/3P	-
1								2
-								-
3	60A/3P	SPARE				SPARE	60A/3P	4
5								6
7								8
9	100A/3P	SPARE				SPARE	30A/3P	10
11								12
13								14
15	50A/2P	SPARE				SPARE	30A/3P	16
17								18
19	1P	SPACE						20
21	**100A/3P**	**PANEL R**	**10.90**			GENSET	150A/6P	22
23				**5.90**				24
25					**6.10**			26
27	1P	SPACE				ATS		28
29	1P	SPACE						30
31	1P	SPACE						32

PANEL: R
TYPE: NQ
MOUNT: SURFACE
REMARKS: **BUILDING M4**
VOLTAGE: 208Y/120, 3ø, 4W
MCB: 100A
AIC: 10K

CKT NO.	BREAKER SIZE	LOAD DESCRIPTION	PHASE A (KVA)	PHASE B (KVA)	PHASE C (KVA)	LOAD DESCRIPTION	BREAKER SIZE	CKT NO.
1	50A/2P	F-4	4.90 1.00			ACCU-4	15A/2P	2
3				4.90 1.00				4
5	60A/2P	EWH-4			5.00 0.50	L: WOMENS RR	20A/1P	6
7			5.00			SPACE	1P	8
9	1P	SPACE				SPACE	1P	10
11	20A/1P	R: WOMENS RR			0.60	SPACE	1P	12
13	1P	SPACE				SPACE	1P	14
15	1P	SPACE				SPACE	1P	16
17	1P	SPACE				SPACE	1P	18

PANEL: MDP
TYPE: P1
MOUNT: SURFACE
REMARKS: **BUILDING-M5 ; BOLD INDICATES NEW CIRCUIT BREAKER(S)**
VOLTAGE: 208Y/120, 3ø, 4W
MLO: 400A
AIC: 10K

CKT NO.	BREAKER SIZE	LOAD DESCRIPTION	PHASE A (KVA)	PHASE B (KVA)	PHASE C (KVA)	LOAD DESCRIPTION	BREAKER SIZE	CKT NO.
1	20A/1P	EXISTING LITE				SPARE	20A/1P	2
3	20A/1P	EXISTING LITE				SPARE	20A/3P	4
5	**60A/2P**	**SPARE**						6
7								8
9	20A/3P	SPARE				SPACE	1P	10
11						SPACE	1P	12
13						SPACE	1P	14
15	100A/3P	SPARE				SPARE	20A/3P	16
17								18
19								20
21	1P	SPACE				SPACE	1P	22
23	1P	SPACE				SPACE	1P	24
25	**150A/3P**	**OFFICE PANEL**	**16.70**			PANEL 'E'	40A/3P	26
27				**10.70**				28
29					**11.10**			30
	200A/3P	PANEL 'A'						

PANEL: OFFICE PANEL (OP)
TYPE: P1
MOUNT: SURFACE
REMARKS: **BUILDING-M5**
VOLTAGE: 208Y/120, 3ø, 4W
MCB: 150A
AIC: 10K

CKT NO.	BREAKER SIZE	LOAD DESCRIPTION	PHASE A (KVA)	PHASE B (KVA)	PHASE C (KVA)	LOAD DESCRIPTION	BREAKER SIZE	CKT NO.
1	100/2P	F-5	7.50 1.70			ACCU-5	25A/2P	2
3				7.50 1.70				4
5	30A/2P	EXISTING AC			2.50 5.00	EWH-5	60A/2P	6
7			2.50 5.00					8
9	20A/1P	RAD-5		0.50 0.50		L: WOMENS RR	20A/1P	10
11	20A/1P	EXISTING RECPT			1.00 0.60	R: WOMENS RR	20A/1P	12
13	1P	SPACE				SPACE	1P	14
15	20A/1P	EXISTING RECPT		1.00		SPACE	1P	16
17	20A/1P	EXISTING RECPT			1.00 1.00	EXISTING RECPT	20A/1P	18
19	1P	SPACE				SPACE	1P	20
21	1P	SPACE				SPACE	1P	22
23	1P	SPACE				SPACE	1P	24
25	1P	SPACE				SPACE	1P	26
27	1P	SPACE				SPACE	1P	28
29	1P	SPACE				SPACE	1P	30

REV	DESCRIPTION	BY	DATE

THOMAS P. OFFERLE
No. 10303150

TOfferle

SCO ENGINEERING, LLC
SOLUTIONS PROVIDED • PROBLEMS SOLVED
FORT WAYNE
6534 Constitution Drive
Fort Wayne, IN 46804
(260) 436-9213
(260) 432-5481 fax
scofw@sco-llc.com

JONES PETRIE RAFINSKI
South Bend, IN
p: 574.232.4388
Fort Wayne, IN
p: 260.422.2522

TOLL ROAD MAINTENANCE BARN
LA PORTE, IN 46350
SHIPSHEWANA, IN 46565
ORLAND, IN 46776
4504 N. FAIL RD
7200 N. 600 W
7565 N. 650 W

ITRCC
3200 CASSOPOLIS STREET
ELKHART, IN 46514

ELECTRICAL SCHEDULES

DESIGNED BY: NLG
REVIEWED BY: TPO
DRAWN BY: NLG
DATE: 1/23/2025 BID SET
JOB NUMBER: 2024-01323
SCALE: As indicated

M2, M4, M5-E601